TABLE OF CONTENTS

SHEET NO.	SHEET DESCRIPTION
1	NOTES AND BOM
2	CONFIGURATIONS
3-4	KEY CONFIGURATIONS
5	BLADE CONNECTOR ASSEMBLY
6	SYSTEM PACKAGING
7	BACKSHELL NOTES
8	BACKSHELL
9	BACKSHELL CONFIGURATIONS

NOTES: VALID UNLESS OTHERWISE SPECIFIED

1. GENERAL:
a. APPLICATION SPECIFICATION SEE: AS-33472-100
-CONTAINS: PRODUCT INTRODUCTION, PRODUCT SUMMARY, CONNECTOR ASSEMBLY, PACKAGING INFORMATION, CONNECTOR MATING, SERVICE INSTRUCTIONS, ELECTRICAL CONTINUITY CHECKING, CRIMPING, AND TROUBLESHOOTING.
-DESIGNED TO MATE WITH CONNECTOR AS SPECIFIED IN THE MATING CONNECTOR DRAWINGS CHART.
-ASSEMBLY SHIPPED WITH PLR IN PRE-LOCK POSITION (SEE PLR PRE-LOCK VIEW SHEET 5).

b. PRODUCT SPECIFICATION SEE: PS-160008-0001
CONTAINS: SCOPE, PRODUCT DESCRIPTION, INTEGRAL COMPONENTS AND ACCESSORIES, APPLICABLE DOCUMENTS AND SPECIFICATIONS, RATINGS, PERFORMANCE, PACKAGING, GUAGES AND FIXTURES, AND OTHER INFORMATION.
c. PACKAGING SPECIFICATION PER MOLEX DRAWING: SEE PACKAGING CHART.
d. PARTS MUST BE IN COMPLIANCE TO MOLEX CHEMICAL SUBSTANCES FOR PRODUCTS AND PACKAGING SPECIFICATION: QEHS-699000-300
e. DATA MUST BE SUBMITTED UNDER THE MOLEX PART NUMBER TO IMDS (COMPANY ID#13255)

2. DESIGN - MATERIALS:
a. SEE BOM TABLE IN SD-160011-0002

3. DESIGN - GEOMETRY:
a. THE 3-D CAD DATA IS BASIC (WITHOUT TOLERANCE) AND MASTER FOR THIS PART WITH THE EXCEPTION OF UNDERLINED DIMENSIONS. DIMENSIONAL INFORMATION NOT SHOWN ON THIS DRAWING IS DEFINED BY THE DATA FILE AT ITS LATEST REVISION.
b. GEOMETRIC DIMENSIONS AND TOLERANCES PER ASME Y14.5M-2009
c. EDGES AND UNDIMENSIONED DETAILS PER ISO13715
d. CORNERS SHOWN AS SHARP TO BE R 0.2 MAX.
e. LETTERING SHALL BE 0.15 MAX RAISED IN 0.25 MAX RECESS PAD. THIS INCLUDES RECYCLING CODE, CAVITY ID, VENDOR IDENTIFICATION, AND CUSTOMER MATERIAL NUMBER.
f. VISUAL DEFECTS SHALL MEET COSMETIC STANDARD PS-45499-002 (Class B).
g. LASER MARKING:
1. PART NUMBER
2. DAY OF THE YEAR
3. SHIFT
4. YEAR
FOR ADDITIONAL INFORMATION REFERENCE SECTION 5 UNDER PROCEDURES IN ES-34735-008.

PACKAGING

DESCRIPTION	DRAWING NO.
2X2	TBD
2X3	TBD
2X4	PK-36518-392
2X6	PK-31300-635
2X8	TBD
2X10	PK-31300-635

MATING CONNECTOR DRAWINGS

DESCRIPTION	MOLEX INLINE
2X2	TBD
2X3	TBD
2X4	SD-160008-0001
2X6	SD-160008-0001
2X8	TBD
2X10	SD-160018-0001

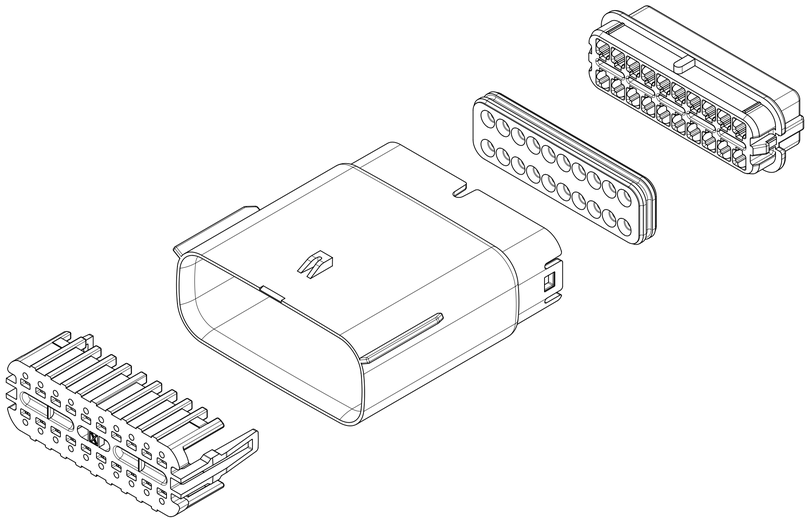

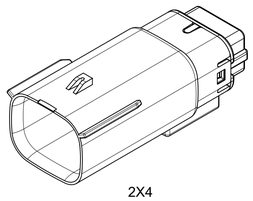

2X4

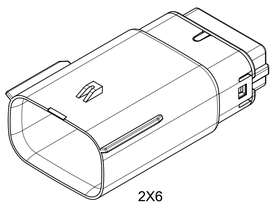

2X6

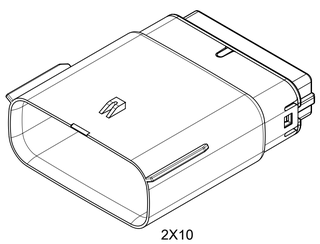

2X10

INSPECTION NUMBER LOG
LAST NUMBER:
ADDED:
REMOVED:

REV	REV DESCRIPTION
A5	ADDED MOLEX BACKSHELL DETAILS
A4	MIGRATED FROM COCREATE AND IMPORTED DXF FILES
A3	ADDED SHEET 6 & UPDATED PASS THRU
A2	UPDATED NOTES & BACKSHELL INFO
A1	CORRECTED DIM 16
A	INITIAL RELEASE

THIS DRAWING CONTAINS INFORMATION THAT IS PROPRIETARY TO MOLEX ELECTRONIC TECHNOLOGIES, LLC AND SHOULD NOT BE USED WITHOUT WRITTEN PERMISSION

SYMBOLS	DIMENSION UNITS	SCALE
A = 0	mm	1.5:1
C = 0	GENERAL TOLERANCES (UNLESS SPECIFIED)	
F = 0	ANGULAR TOL	± 3.0 °
S = 0	4 PLACES	±
= 0	3 PLACES	±
C = 0	2 PLACES	± 0.1
= 0	1 PLACE	± 0.2
= 0	0 PLACES	±
= 0	DRAFT WHERE APPLICABLE MUST REMAIN WITHIN DIMENSIONS	
= 0		

CURRENT REV DESC:

EC NO: 171650
DRWN: PMANJUNATHAC 2018/01/01
CHK'D: MVANSLAMBROU 2018/02/16
APPR: MVANSLAMBROU 2018/02/16

INITIAL REVISION:
DRWN: KBORUSZEWSKI 2014/02/19
APPR: VKOSHY 2014/03/05

THIRD ANGLE PROJECTION | DRAWING: A1-SIZE | SERIES: 160011

molex

MX150 GEN 2 BLADE
DUAL ROW SEALED ASSEMBLY MAT SEAL

PRODUCT CUSTOMER DRAWING

DOCUMENT NUMBER	DOC TYPE	DOC PART	REVISION
SD-160011-0001	PSD	001	A5

MATERIAL NUMBER | CUSTOMER: GENERAL MARKET | SHEET NUMBER: 1 OF 11

DOCUMENT STATUS	P1	RELEASE DATE	2018/02/16 22:02:24

Created in Creo Illustrate
REVISED in
DATE 2018/02/16

SHEET DESCRIPTION
CONFIGURATIONS

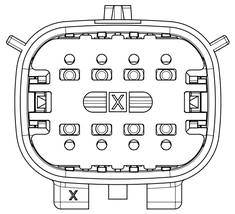

2X4

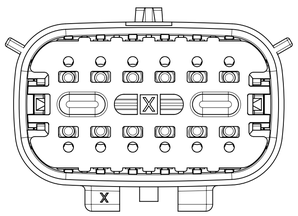

2X6

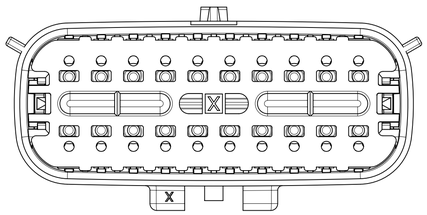

2X10

DOCUMENT STATUS	P1	RELEASE DATE	2018/02/16	22:02:24

SYMBOLS	
=	0
=	0
=	0
=	0
=	0
=	0
=	0
=	0
=	0

THIS DRAWING CONTAINS INFORMATION THAT IS PROPRIETARY TO MOLEX ELECTRONIC TECHNOLOGIES, LLC AND SHOULD NOT BE USED WITHOUT WRITTEN PERMISSION

DIMENSION UNITS	SCALE
mm	3:1

GENERAL TOLERANCES (UNLESS SPECIFIED)		
ANGULAR TOL	±	3.0 °
4 PLACES	±	
3 PLACES	±	
2 PLACES	±	0.1
1 PLACE	±	0.2
0 PLACES	±	

DRAFT WHERE APPLICABLE MUST REMAIN WITHIN DIMENSIONS

CURRENT REV DESC:

EC NO: 171650
DRWN: PMANJUNATHAC 2018/01/01
CHK'D: MVANSLAMBROU 2018/02/16
APPR: MVANSLAMBROU 2018/02/16

INITIAL REVISION:
DRWN: KBORUSZEWSKI 2014/02/19
APPR: VKOSHY 2014/03/05

THIRD ANGLE PROJECTION

DRAWING	SERIES
A1-SIZE	160011

molex

MX150 GEN 2 BLADE
DUAL ROW SEALED ASSEMBLY MAT SEAL

PRODUCT CUSTOMER DRAWING

DOCUMENT NUMBER	DOC TYPE	DOC PART	REVISION
SD-160011-0001	PSD	001	A5

MATERIAL NUMBER	CUSTOMER	SHEET NUMBER
	GENERAL MARKET	2 OF 11

FORMAT: master-tb-prod-A1
CHECKED: 2018/01/19
DATE: 2018/01/19

SHEET DESCRIPTION
KEY CONFIGURATIONS

2X4

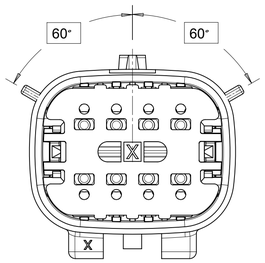

KEY A

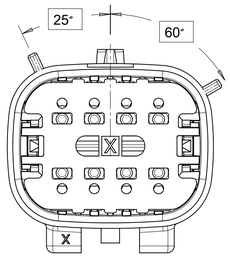

KEY B

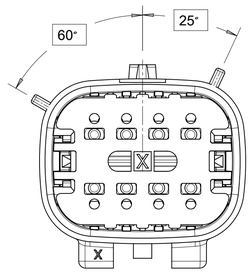

KEY C

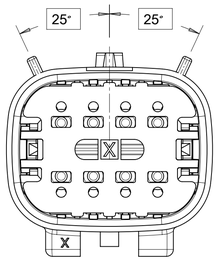

KEY D

SYMBOLS	
A	= 0
E	= 0
F	= 0
S	= 0
	= 0
C	= 0
	= 0
	= 0
	= 0

DIMENSION UNITS	SCALE
mm	3:1

GENERAL TOLERANCES (UNLESS SPECIFIED)		
ANGULAR TOL	±	3.0 °
4 PLACES	±	
3 PLACES	±	
2 PLACES	±	0.1
1 PLACE	±	0.2
0 PLACES	±	

DRAFT WHERE APPLICABLE MUST REMAIN WITHIN DIMENSIONS

THIS DRAWING CONTAINS INFORMATION THAT IS PROPRIETARY TO MOLEX ELECTRONIC TECHNOLOGIES, LLC AND SHOULD NOT BE USED WITHOUT WRITTEN PERMISSION

CURRENT REV DESC:

EC NO: 171650
DRWN: PMANJUNATHAC 2018/01/01
CHK'D: MVANSLAMBROU 2018/02/16
APPR: MVANSLAMBROU 2018/02/16

INITIAL REVISION:
DRWN: KBORUSZEWSKI 2014/02/19
APPR: VKOSHY 2014/03/05

THIRD ANGLE PROJECTION

DRAWING: A1-SIZE
SERIES: 160011

molex

MX150 GEN 2 BLADE
DUAL ROW SEALED ASSEMBLY MAT SEAL

PRODUCT CUSTOMER DRAWING

DOCUMENT NUMBER	DOC TYPE	DOC PART	REVISION
SD-160011-0001	PSD	001	A5

MATERIAL NUMBER	CUSTOMER	SHEET NUMBER
	GENERAL MARKET	3 OF 11

DOCUMENT STATUS	P1	RELEASE DATE	2018/02/16 22:02:24

TEMPLATE: master-tb-prod-A
REVISION: 1
DATE: 2018/01/10

SHEET DESCRIPTION
KEY CONFIGURATIONS CONT.

2X6

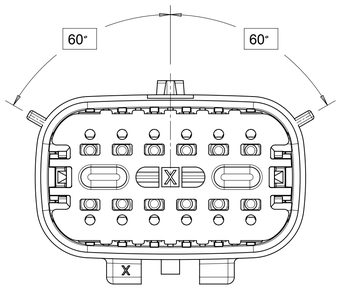

KEY A

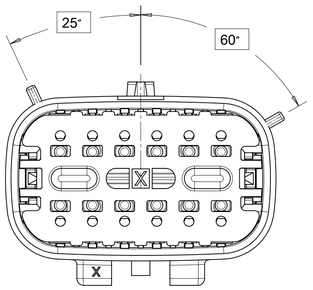

KEY B

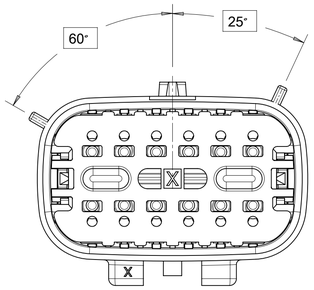

KEY C

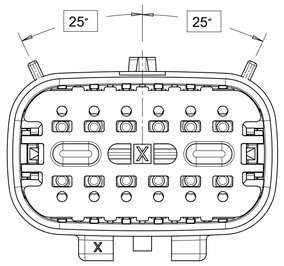

KEY D

2X10

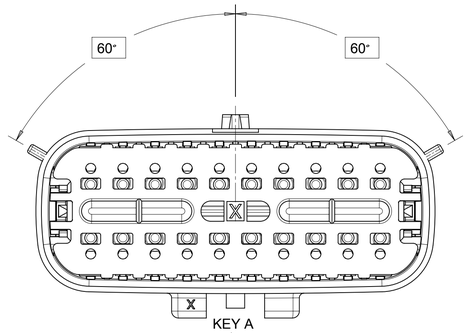

KEY A

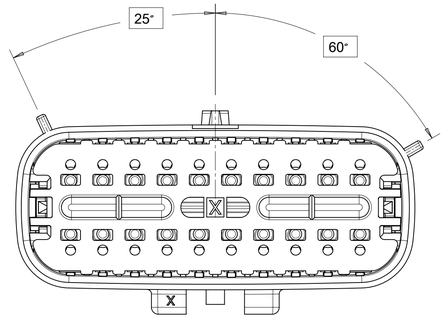

KEY B

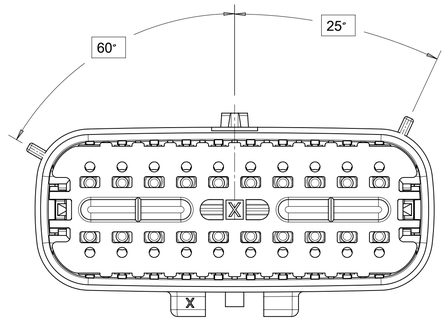

KEY C

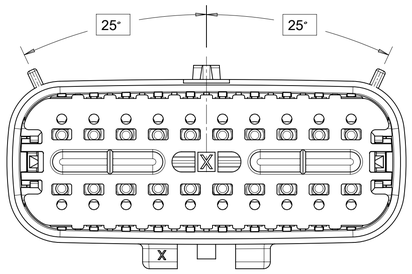

KEY D

SYMBOLS
= 0
= 0
= 0
= 0
= 0
= 0
= 0
= 0
= 0

THIS DRAWING CONTAINS INFORMATION THAT IS PROPRIETARY TO MOLEX ELECTRONIC TECHNOLOGIES, LLC AND SHOULD NOT BE USED WITHOUT WRITTEN PERMISSION

DIMENSION UNITS	SCALE
mm	3:1

GENERAL TOLERANCES (UNLESS SPECIFIED)		
ANGULAR TOL	±	3.0 °
4 PLACES	±	
3 PLACES	±	
2 PLACES	±	0.1
1 PLACE	±	0.2
0 PLACES	±	

DRAFT WHERE APPLICABLE MUST REMAIN WITHIN DIMENSIONS

CURRENT REV DESC:

EC NO: 171650
DRWN: PMANJUNATHAC 2018/01/01
CHK'D: MVANSLAMBROU 2018/02/16
APPR: MVANSLAMBROU 2018/02/16

INITIAL REVISION:
DRWN: KBORUSZEWSKI 2014/02/19
APPR: VKOSHY 2014/03/05

THIRD ANGLE PROJECTION | DRAWING: A1-SIZE | SERIES: 160011

molex

MX150 GEN 2 BLADE
DUAL ROW SEALED ASSEMBLY MAT SEAL

PRODUCT CUSTOMER DRAWING

DOCUMENT NUMBER	DOC TYPE	DOC PART	REVISION
SD-160011-0001	PSD	001	A5

MATERIAL NUMBER	CUSTOMER	SHEET NUMBER
	GENERAL MARKET	4 OF 11

DOCUMENT STATUS	P1	RELEASE DATE	2018/02/16 22:02:24

FORMAT: master-tb-prod-A1
TEMPLATE: 000000
DATE: 2018/01/16

SHEET DESCRIPTION
BLADE CONNECTOR ASSEMBLY

CHARTED DIMENSION			
DESCRIPTION	DIMENSIONS		
	A	B	C
2X2	TBD	TBD	TBD
2X3	TBD	TBD	TBD
2X4	12.46	1.75	27.9
2X6	15.96	1.75	32.7
2X8	TBD	TBD	TBD
2X10	22.97	1.75	46.4

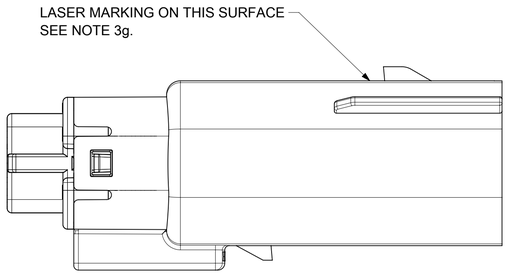

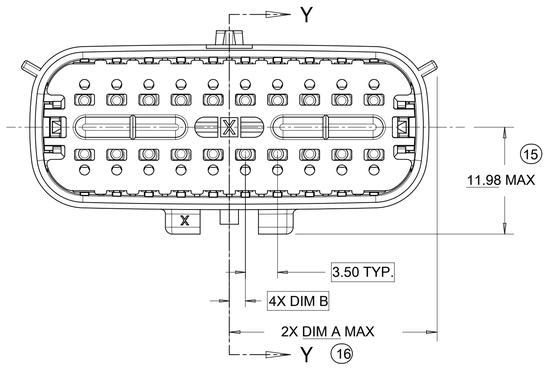

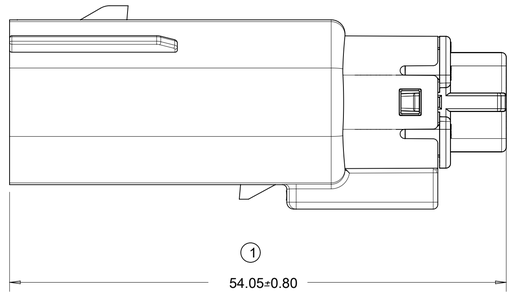

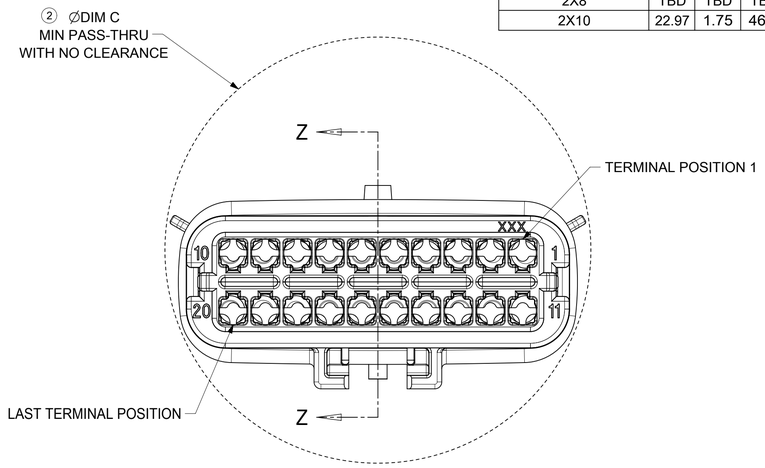

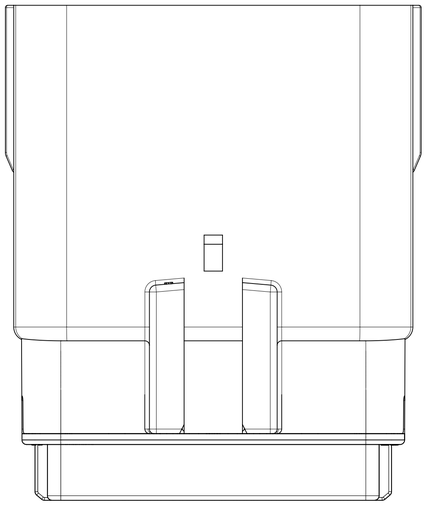

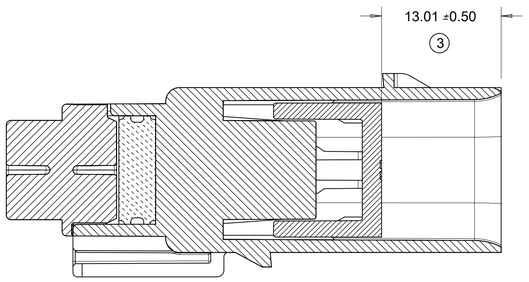

PRIMARY LOCK REINFORCER (PLR) SHOWN
IN PRE-STAGE POSITION

SECTION Z-Z

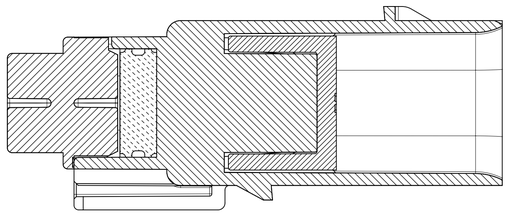

PRIMARY LOCK REINFORCER (PLR) SHOWN
IN FINAL-LOCK POSITION

SECTION Y-Y

SYMBOLS	
A =	0
C =	0
D =	0
S =	0
▼ =	0
C =	0
☒ =	0
■ =	0
=	0

THIS DRAWING CONTAINS INFORMATION THAT IS PROPRIETARY TO MOLEX ELECTRONIC TECHNOLOGIES, LLC AND SHOULD NOT BE USED WITHOUT WRITTEN PERMISSION

DIMENSION UNITS	SCALE
mm	3:1

GENERAL TOLERANCES (UNLESS SPECIFIED)		
ANGULAR TOL	±	3.0 °
4 PLACES	±	
3 PLACES	±	
2 PLACES	±	0.1
1 PLACE	±	0.2
0 PLACES	±	

DRAFT WHERE APPLICABLE MUST REMAIN WITHIN DIMENSIONS

CURRENT REV DESC:

EC NO: 171650
DRWN: PMANJUNATHAC 2018/01/01
CHK'D: MVANSLAMBROU 2018/02/16
APPR: MVANSLAMBROU 2018/02/16

INITIAL REVISION:
DRWN: KBORUSZEWSKI 2014/02/19
APPR: VKOSHY 2014/03/05

THIRD ANGLE PROJECTION | DRAWING: A1-SIZE | SERIES: 160011

molex

MX150 GEN 2 BLADE
DUAL ROW SEALED ASSEMBLY MAT SEAL

PRODUCT CUSTOMER DRAWING

DOCUMENT NUMBER	DOC TYPE	DOC PART	REVISION
SD-160011-0001	PSD	001	A5

MATERIAL NUMBER	CUSTOMER	SHEET NUMBER
	GENERAL MARKET	5 OF 11

DOCUMENT STATUS	P1	RELEASE DATE	2018/02/16 22:02:24

PDMWORK Version 10 (build 47)
DATE: 2018/02/16
TIME: 22:02:24

SHEET DESCRIPTION
SYSTEM PACKAGING

CHARTED DIMENSION				
CKT	BLADE CONFIGURATION	RECEPTACLE CONFIGURATION	DIMENSIONS	
			D	E
2X4	STANDARD	STANDARD	30.1	28.48
		CLIPSLOT	31.1	28.48
2X6	STANDARD	STANDARD	36.3	35.5
		CLIPSLOT	36.3	35.5
2X10	STANDARD	STANDARD	49.8	49.5
		CLIPSLOT	49.8	49.5

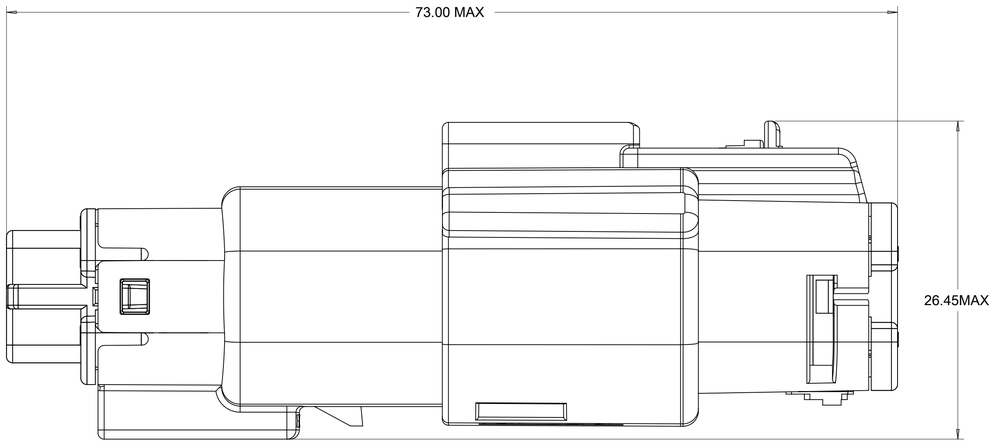

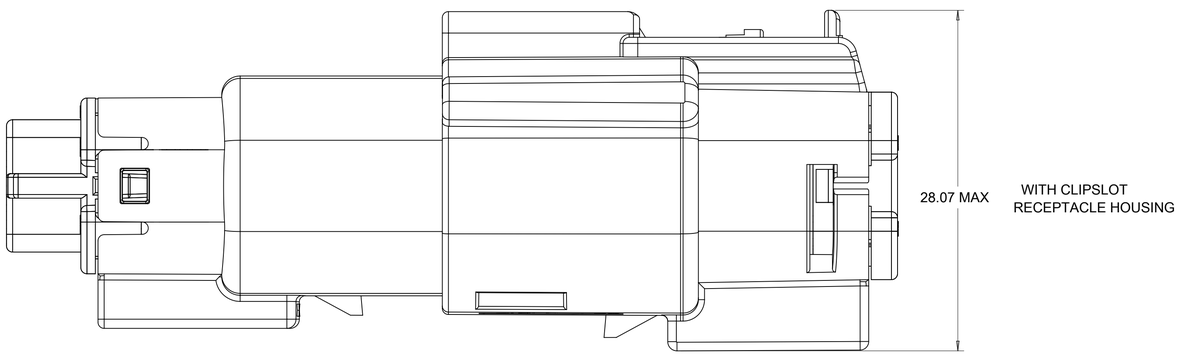

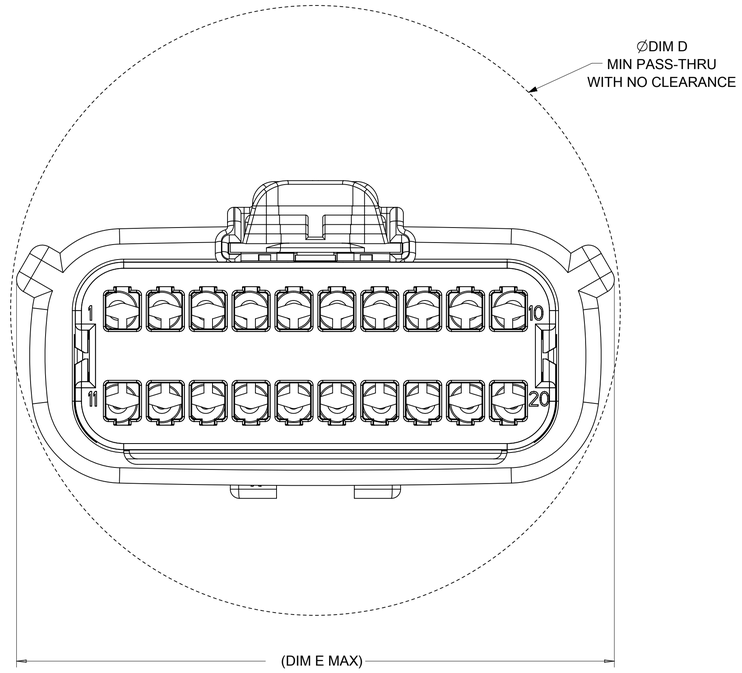

SYMBOLS	
A = 0	
C = 0	
F = 0	
S = 0	
= 0	
C = 0	
= 0	
= 0	
= 0	

THIS DRAWING CONTAINS INFORMATION THAT IS PROPRIETARY TO MOLEX ELECTRONIC TECHNOLOGIES, LLC AND SHOULD NOT BE USED WITHOUT WRITTEN PERMISSION

DIMENSION UNITS	SCALE
mm	4:1

GENERAL TOLERANCES (UNLESS SPECIFIED)		
ANGULAR TOL	±	3.0 °
4 PLACES	±	
3 PLACES	±	
2 PLACES	±	0.1
1 PLACE	±	0.2
0 PLACES	±	

DRAFT WHERE APPLICABLE MUST REMAIN WITHIN DIMENSIONS

CURRENT REV DESC:

EC NO: 171650
DRWN: PMANJUNATHAC 2018/01/01
CHK'D: MVANSLAMBROU 2018/02/16
APPR: MVANSLAMBROU 2018/02/16

INITIAL REVISION:
DRWN: KBORUSZEWSKI 2014/02/19
APPR: VKOSHY 2014/03/05

THIRD ANGLE PROJECTION | DRAWING: A1-SIZE | SERIES: 160011

molex

MX150 GEN 2 BLADE
DUAL ROW SEALED ASSEMBLY MAT SEAL

PRODUCT CUSTOMER DRAWING

DOCUMENT NUMBER	DOC TYPE	DOC PART	REVISION
SD-160011-0001	PSD	001	A5

MATERIAL NUMBER	CUSTOMER	SHEET NUMBER
	GENERAL MARKET	6 OF 11

DOCUMENT STATUS	P1	RELEASE DATE	2018/02/16 22:02:24

SHEET DESCRIPTION
BACKSHELL NOTES

BACKSHELL NOTES: VALID UNLESS OTHERWISE SPECIFIED

1. GENERAL:
a. APPLICATION SPECIFICATION SEE: AS-34951-001
-DESIGNED TO MATE WITH BLADE SEALED ASSEMBLY
-SPECIFIED IN MOLEX DRAWING SD-33482-0001
-SYSTEM TO BE USED WITH WIRE WITHIN DIAMETER RANGE OF 1.2mm TO 2.69mm
-COMPONENTS ARE OPTIONAL AND MUST BE PURCHASED SEPERATELY
-DESIGN IS OWNED BY SCHLEMMER FOR SCHLEMMER BACKSHELL.
-DESIGN IS OWNED BY MOLEX FOR MOLEX BACKSHELL.
-90˚ ADAPTOR DESIGN IS OWNED BY MOLEX.
-FOR ADDITIONAL INFORMATION SEE THE BACKSHELL COMPONENT DRAWING SD-34950-0001

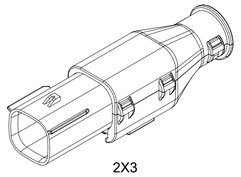

2X3

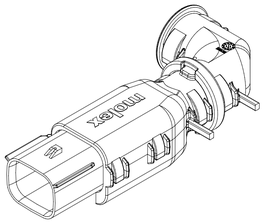

2X4

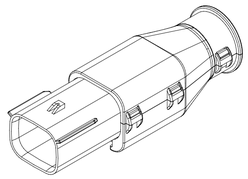

2X4

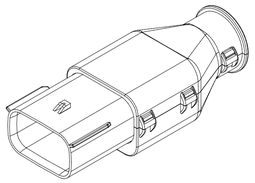

2X6

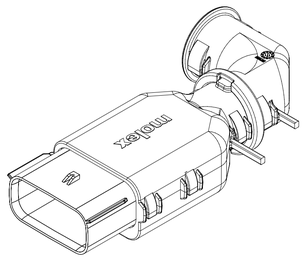

2X8

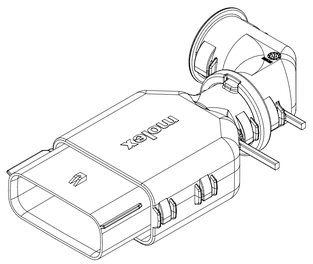

2X10

BACKSHELL CUSTOMER
MODEL NUMBER LEGEND

34950-XXXX

CUSTOMER MODEL COMPONENTS
- 0 - SCHLEMMER BACKSHELL ONLY
- 1 - SCHLEMMER BACKSHELL & MX150 HOUSING KEY A ASSEMBLY
- 2 - SCHLEMMER BACKSHELL & MX150 HOUSING KEY B ASSEMBLY
- 3 - SCHLEMMER BACKSHELL & MX150 HOUSING KEY C ASSEMBLY
- 4 - SCHLEMMER BACKSHELL & MX150 HOUSING KEY D ASSEMBLY
- 5 - MOLEX BACKSHELL ONLY
- 6 - MOLEX BACKSHELL & MX150 HOUSING KEY A ASSEMBLY
- 7 - MOLEX BACKSHELL & MX150 HOUSING KEY B ASSEMBLY
- 8 - MOLEX BACKSHELL & MX150 HOUSING KEY C ASSEMBLY
- 9 - MOLEX BACKSHELL & MX150 HOUSING KEY D ASSEMBLY

BACKSHELL FEATURES
- 1 - WITH RIBS
- 2 - WITHOUT RIBS
- 3 - 90˚ ADAPTOR

MX150 CIRCUIT SIZE 04, 06, 08, 12, 16, 20

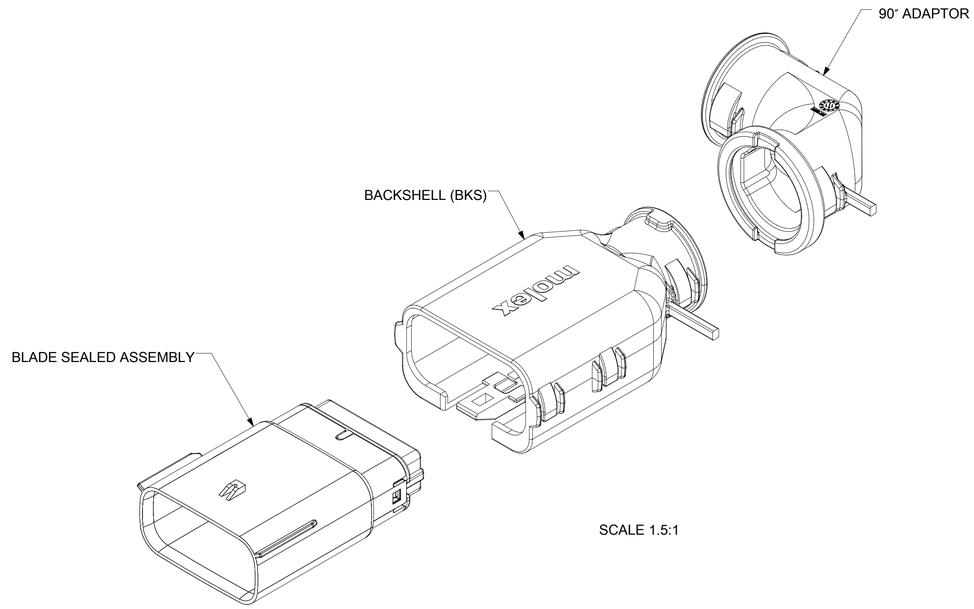

SCALE 1.5:1

SYMBOLS	
F/A	= 0
E/C	= 0
E/F	= 0
S	= 0
▼	= 0
C	= 0
☒	= 0
■	= 0
V	= 0

THIS DRAWING CONTAINS INFORMATION THAT IS PROPRIETARY TO MOLEX ELECTRONIC TECHNOLOGIES, LLC AND SHOULD NOT BE USED WITHOUT WRITTEN PERMISSION

DIMENSION UNITS	SCALE
mm	1.5:1

GENERAL TOLERANCES (UNLESS SPECIFIED)

ANGULAR TOL	±	3.0 °
4 PLACES	±	
3 PLACES	±	
2 PLACES	±	0.1
1 PLACE	±	0.2
0 PLACES	±	

DRAFT WHERE APPLICABLE MUST REMAIN WITHIN DIMENSIONS

CURRENT REV DESC:

EC NO: 171650
DRWN: PMANJUNATHAC 2018/01/01
CHK'D: MVANSLAMBROU 2018/02/16
APPR: MVANSLAMBROU 2018/02/16

INITIAL REVISION:
DRWN: KBORUSZEWSKI 2014/02/19
APPR: VKOSHY 2014/03/05

THIRD ANGLE PROJECTION | DRAWING: A1-SIZE | SERIES: 160011

molex

MX150 GEN 2 BLADE
DUAL ROW SEALED ASSEMBLY MAT SEAL

PRODUCT CUSTOMER DRAWING

DOCUMENT NUMBER	DOC TYPE	DOC PART	REVISION
SD-160011-0001	PSD	001	A5

MATERIAL NUMBER	CUSTOMER	SHEET NUMBER
	GENERAL MARKET	7 OF 11

DOCUMENT STATUS	P1	RELEASE DATE	2018/02/16 22:02:24

FORMAT: molex-tb-prod-A1-
DEVIATION: 0
DATE: 2018/01/16

SHEET DESCRIPTION
SCHLEMMER BACKSHELL

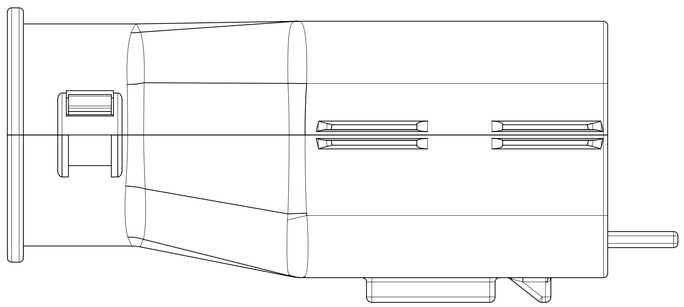

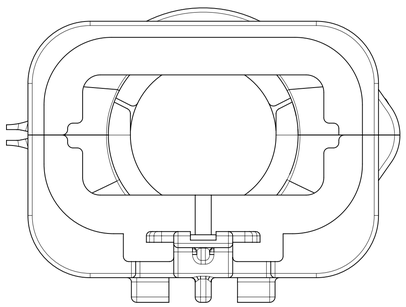

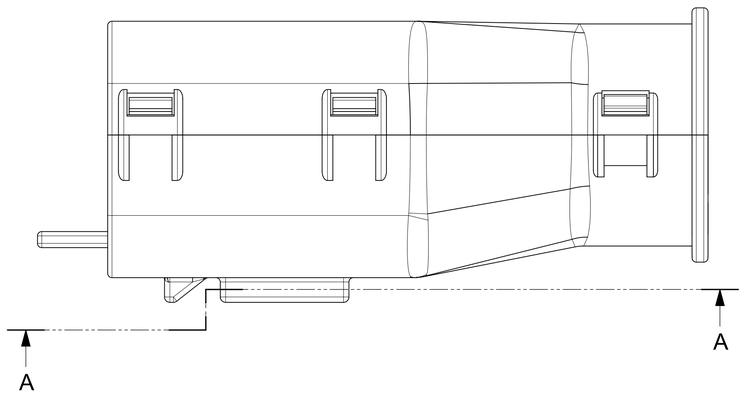

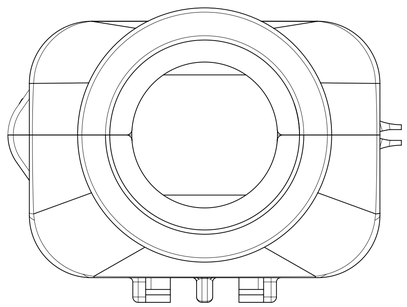

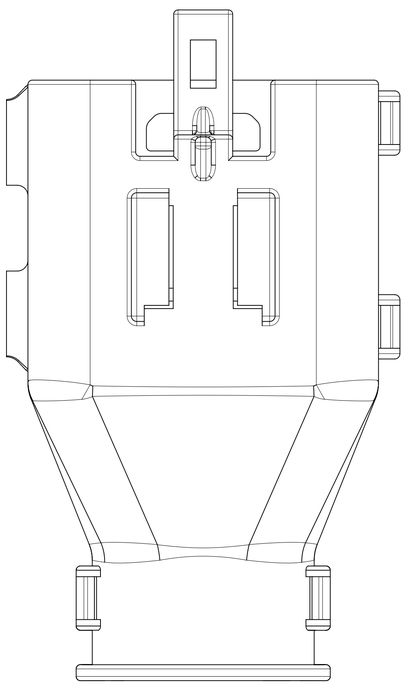

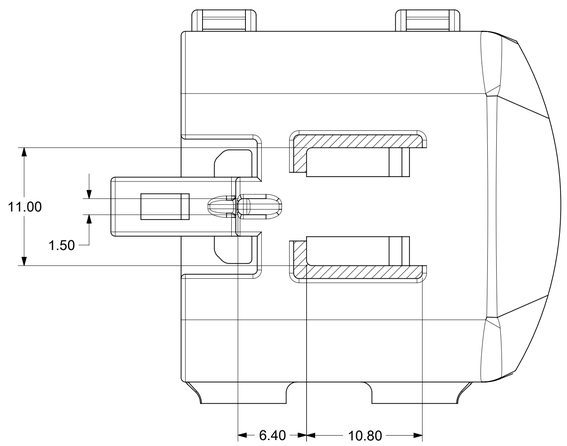

Partial A-A
SCALE 7:2

SYMBOLS	
E/A	= 0
E/C	= 0
E/F	= 0
S	= 0
▼	= 0
C	= 0
☒	= 0
■	= 0
V	= 0

THIS DRAWING CONTAINS INFORMATION THAT IS PROPRIETARY TO MOLEX ELECTRONIC TECHNOLOGIES, LLC AND SHOULD NOT BE USED WITHOUT WRITTEN PERMISSION

DIMENSION UNITS	SCALE
mm	3.5:1

GENERAL TOLERANCES (UNLESS SPECIFIED)		
ANGULAR TOL	±	3.0 °
4 PLACES	±	
3 PLACES	±	
2 PLACES	±	0.1
1 PLACE	±	0.2
0 PLACES	±	

DRAFT WHERE APPLICABLE MUST REMAIN WITHIN DIMENSIONS

CURRENT REV DESC:

EC NO: 171650
DRWN: PMANJUNATHAC 2018/01/01
CHK'D: MVANSLAMBROU 2018/02/16
APPR: MVANSLAMBROU 2018/02/16

INITIAL REVISION:
DRWN: KBORUSZEWSKI 2014/02/19
APPR: VKOSHY 2014/03/05

THIRD ANGLE PROJECTION

DRAWING	SERIES
A1-SIZE	160011

molex

MX150 GEN 2 BLADE
DUAL ROW SEALED ASSEMBLY MAT SEAL

PRODUCT CUSTOMER DRAWING

DOCUMENT NUMBER	DOC TYPE	DOC PART	REVISION
SD-160011-0001	PSD	001	A5

MATERIAL NUMBER	CUSTOMER	SHEET NUMBER
	GENERAL MARKET	8 OF 11

DOCUMENT STATUS	P1	RELEASE DATE	2018/02/16 22:02:24

SHEET DESCRIPTION
MOLEX BACKSHELL

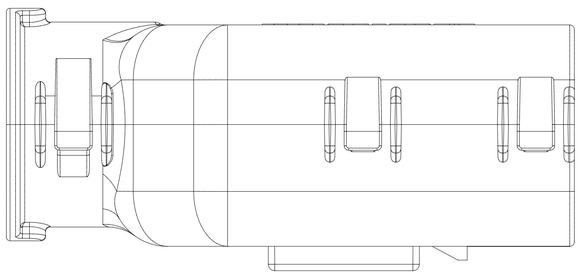

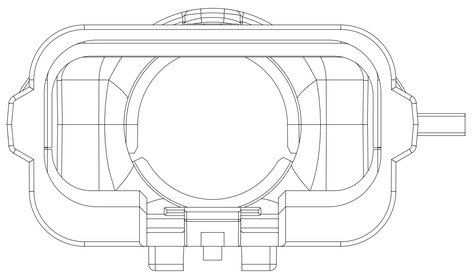

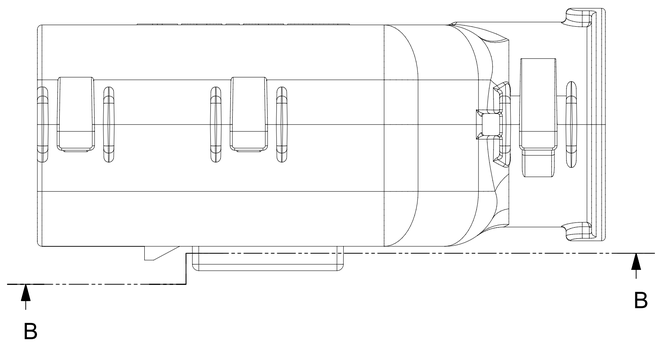

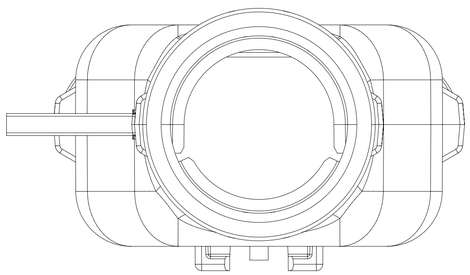

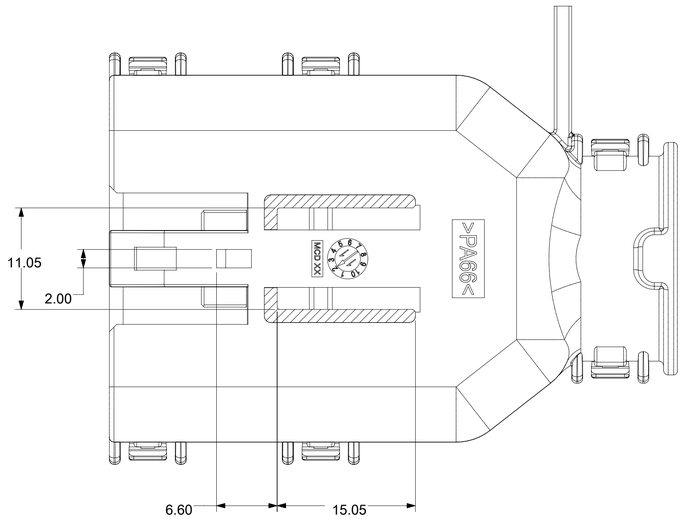

SECTION B-B

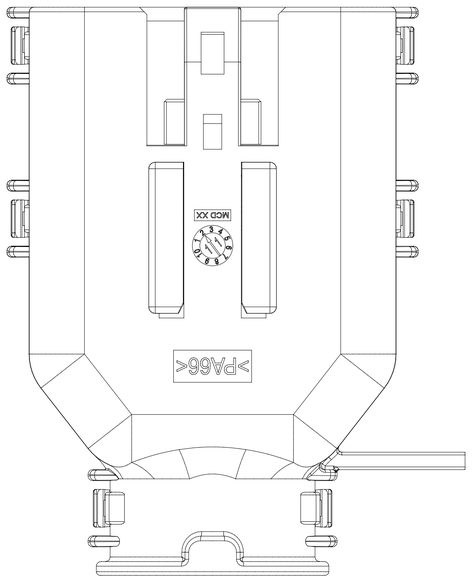

SYMBOLS	
A	= 0
C	= 0
F	= 0
S	= 0
	= 0
C	= 0
	= 0
	= 0
V	= 0

THIS DRAWING CONTAINS INFORMATION THAT IS PROPRIETARY TO MOLEX ELECTRONIC TECHNOLOGIES, LLC AND SHOULD NOT BE USED WITHOUT WRITTEN PERMISSION

DIMENSION UNITS	SCALE
mm	1:1

GENERAL TOLERANCES (UNLESS SPECIFIED)		
ANGULAR TOL	±	3.0 °
4 PLACES	±	
3 PLACES	±	
2 PLACES	±	0.1
1 PLACE	±	0.2
0 PLACES	±	

DRAFT WHERE APPLICABLE MUST REMAIN WITHIN DIMENSIONS

CURRENT REV DESC:

EC NO: 171650
DRWN: PMANJUNATHAC 2018/01/01
CHK'D: MVANSLAMBROU 2018/02/16
APPR: MVANSLAMBROU 2018/02/16

INITIAL REVISION:
DRWN: KBORUSZEWSKI 2014/02/19
APPR: VKOSHY 2014/03/05

THIRD ANGLE PROJECTION | DRAWING: A1-SIZE | SERIES: 160011

molex

MX150 GEN 2 BLADE
DUAL ROW SEALED ASSEMBLY MAT SEAL

PRODUCT CUSTOMER DRAWING

DOCUMENT NUMBER	DOC TYPE	DOC PART	REVISION
SD-160011-0001	PSD	001	A5

MATERIAL NUMBER	CUSTOMER	SHEET NUMBER
	GENERAL MARKET	9 OF 11

DOCUMENT STATUS	P1	RELEASE DATE	2018/02/16 22:02:24

TEMPLATE: master-landscape
REVISION: H
DATE: 2016/01/15

SHEET DESCRIPTION
SCHLEMMER BACKSHELL CONFIGURATIONS

CHARTED DIMENSION							
CKT	BLADE CONFIGURATION	RECEPTACLE CONFIGURATION	DIMENSIONS				
			M	N	P	R	S
2X6	STANDARD	STANDARD	106.83	37.84	37.27	35.83	36.83

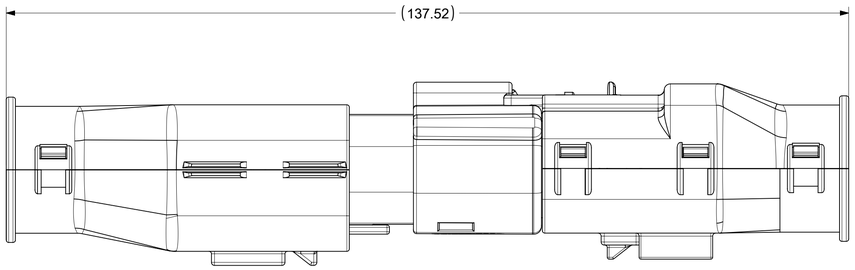

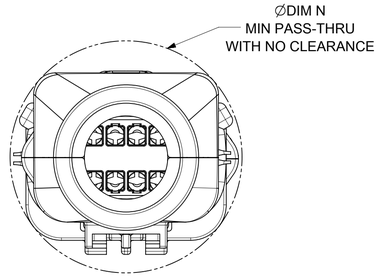

OVERALL MATED SYSTEM WITH BLADE AND RECEPTACLE BACKSHELL

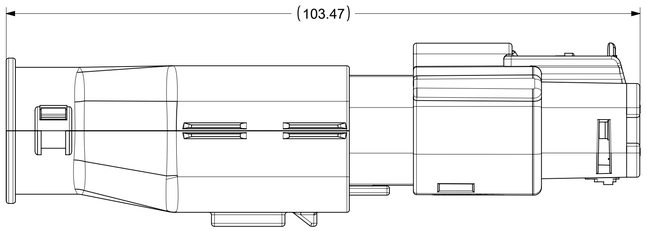

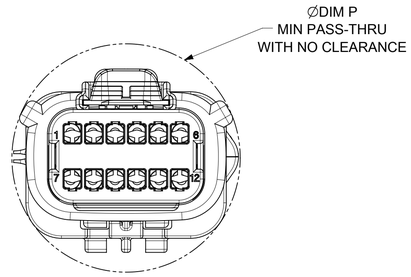

OVERALL MATED SYSTEM WITH BLADE BACKSHELL

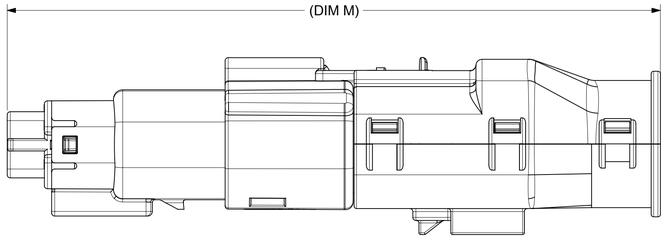

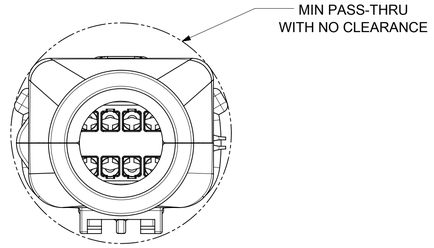

OVERALL MATED SYSTEM WITH RECEPTACLE BACKSHELL

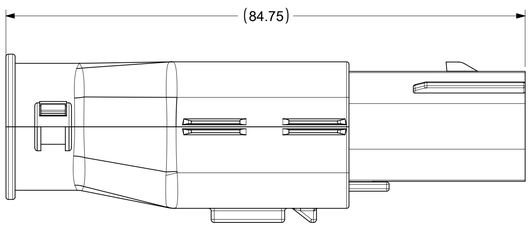

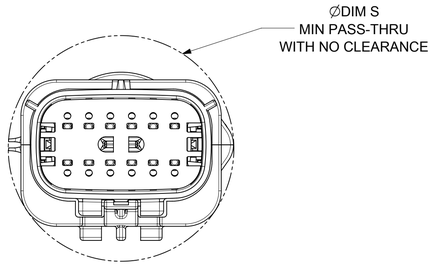

BLADE SEALED ASSEMBLY WITH BLADE BACKSHELL

SYMBOLS	
A	= 0
C	= 0
E	= 0
S	= 0
▼	= 0
C	= 0
☒	= 0
■	= 0
V	= 0

THIS DRAWING CONTAINS INFORMATION THAT IS PROPRIETARY TO MOLEX ELECTRONIC TECHNOLOGIES, LLC AND SHOULD NOT BE USED WITHOUT WRITTEN PERMISSION

DIMENSION UNITS	SCALE
mm	2:1

GENERAL TOLERANCES (UNLESS SPECIFIED)		
ANGULAR TOL	±	3.0 °
4 PLACES	±	
3 PLACES	±	
2 PLACES	±	0.1
1 PLACE	±	0.2
0 PLACES	±	

DRAFT WHERE APPLICABLE MUST REMAIN WITHIN DIMENSIONS

CURRENT REV DESC:

EC NO: 171650
DRWN: PMANJUNATHAC 2018/01/01
CHK'D: MVANSLAMBROU 2018/02/16
APPR: MVANSLAMBROU 2018/02/16

INITIAL REVISION:
DRWN: KBORUSZEWSKI 2014/02/19
APPR: VKOSHY 2014/03/05

THIRD ANGLE PROJECTION | DRAWING: A1-SIZE | SERIES: 160011

molex

MX150 GEN 2 BLADE
DUAL ROW SEALED ASSEMBLY MAT SEAL

PRODUCT CUSTOMER DRAWING

DOCUMENT NUMBER	DOC TYPE	DOC PART	REVISION
SD-160011-0001	PSD	001	A5

MATERIAL NUMBER	CUSTOMER	SHEET NUMBER
	GENERAL MARKET	10 OF 11

DOCUMENT STATUS	P1	RELEASE DATE	2018/02/16 22:02:24

TEMPLATE: PRODUCT DRAWING
REVISION: H
DATE: 2018/01/19

SHEET DESCRIPTION
MOLEX BACKSHELL CONFIGURATIONS

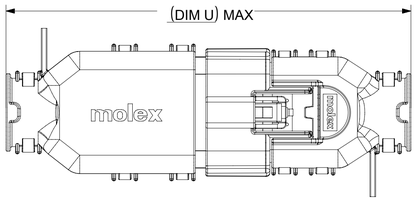

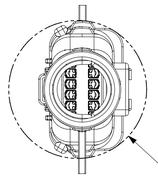

MIN PASS-THRU
WITH NO CLEARANCE

OVERALL MATED SYSTEM WITH BLADE AND RECEPTACLE BACKSHELL

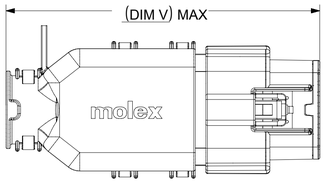

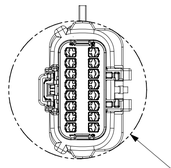

MIN PASS-THRU
WITH NO CLEARANCE

OVERALL MATED SYSTEM WITH BLADE BACKSHELL

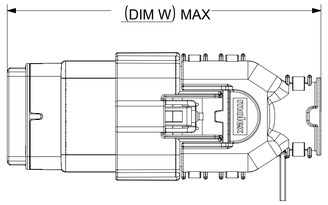

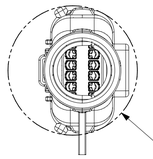

MIN PASS-THRU
WITH NO CLEARANCE

OVERALL MATED SYSTEM WITH RECEPTACLE BACKSHELL

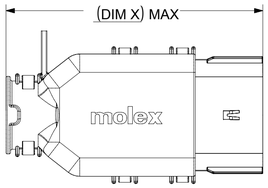

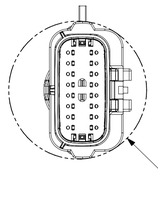

MIN PASS-THRU
WITH NO CLEARANCE

BLADE SEALED ASSEMBLY WITH BLADE BACKSHELL

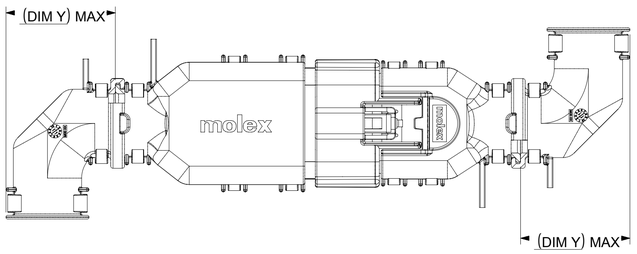

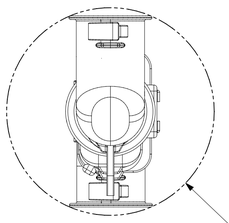

MIN PASS-THRU
WITH NO CLEARANCE

ADD THE VALUE OF 'Y' TO THE TOTAL DIMENSION
WHENEVER ADAPTOR IS USED

CHARTED DIMENSIONS

CKT	BLADE CONFIGURATION	RECEPTACLE CONFIGURATION	DIMENSIONS									
			U	V	W	X	Y	AA	AB	AC	AD	AE
2X4	STANDARD	STANDARD	115.29	94.34	93.98	75.62	32.10	32.93	32.54	32.85	31.76	56.81
2X8	STANDARD	STANDARD	N/A	N/A	N/A	N/A	N/A	N/A	N/A	N/A	N/A	N/A
2X10	STANDARD	STANDARD	132.54	102.79	102.78	84.07	36.10	45.44	45.44	42.65	45.44	68.18

SYMBOLS	
5	= 0
4	= 0
3	= 0
5	= 0
▼	= 0
2	= 0
☒	= 0
■	= 0
6	= 0

THIS DRAWING CONTAINS INFORMATION THAT IS PROPRIETARY TO MOLEX ELECTRONIC TECHNOLOGIES, LLC AND SHOULD NOT BE USED WITHOUT WRITTEN PERMISSION

DIMENSION UNITS	SCALE
mm	1:1

GENERAL TOLERANCES (UNLESS SPECIFIED)		
ANGULAR TOL	±	3.0 °
4 PLACES	±	
3 PLACES	±	
2 PLACES	±	0.1
1 PLACE	±	0.2
0 PLACES	±	

DRAFT WHERE APPLICABLE MUST REMAIN WITHIN DIMENSIONS

CURRENT REV DESC:

EC NO: 171650
DRWN: PMANJUNATHAC 2018/01/01
CHK'D: MVANSLAMBROU 2018/02/16
APPR: MVANSLAMBROU 2018/02/16

INITIAL REVISION:
DRWN: KBORUSZEWSKI 2014/02/19
APPR: VKOSHY 2014/03/05

THIRD ANGLE PROJECTION | DRAWING: A1-SIZE | SERIES: 160011

molex

MX150 GEN 2 BLADE
DUAL ROW SEALED ASSEMBLY MAT SEAL

PRODUCT CUSTOMER DRAWING

DOCUMENT NUMBER	DOC TYPE	DOC PART	REVISION
SD-160011-0001	PSD	001	A5

MATERIAL NUMBER	CUSTOMER	SHEET NUMBER
	GENERAL MARKET	11 OF 11

DOCUMENT STATUS	P1	RELEASE DATE	2018/02/16 22:02:24

MX150 GEN 2 BLADE 2X4 SEALED ASSEMBLY MAT SEAL
BOM AND PIN OUT SHEET

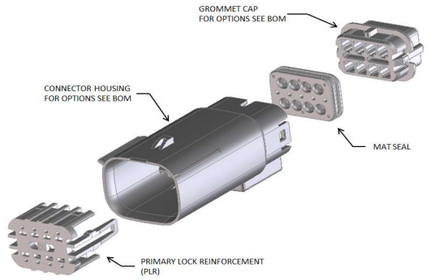

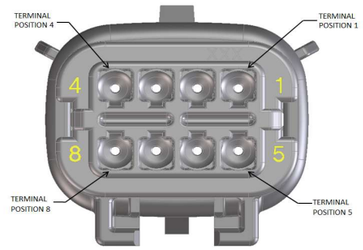

ABBREVIATION	DESCRIPTION	COLOR	MATERIAL
A-BLK-CLIP	HOUSING KEYING OPTION A WITH CLIPSLOT	BLACK	SPS/NYLON GF20
B-LG-CLIP	HOUSING KEYING OPTION B WITH CLIPSLOT	LIGHT GRAY	SPS/NYLON GF20
C-DG-CLIP	HOUSING KEYING OPTION C WITH CLIPSLOT	DARK GRAY	SPS/NYLON GF20
D-SG-CLIP	HOUSING KEYING OPTION D WITH CLIPSLOT	STONE GRAY	SPS/NYLON GF20
GCP	GROMMET CAP (PLUGGED)	BLACK	SPS/NYLON GF20
GCO	GROMMET CAP (OPEN)	BLACK	SPS/NYLON GF20
PLR-1	PLR-1	NATURAL	SPS/NYLON GF20
PLR-3	PLR-3	NATURAL	SPS/NYLON GF20
M-R	MAT SEAL	RUST RED	INHERENTLY LUBRICATED SILICONE
M-B	MAT SEAL	ROYAL BLUE	INHERENTLY LUBRICATED SILICONE

FOR ADDITIONAL INFORMATION SEE SD-160011-0001

ASSEMBLY DESCRIPTION	ASSEMBLY PART NUMBER	COMPONENT THE PRESENCE OF AN ABBREVIATION INDICATES THE PRESENCE OF THAT COMPONENT.				BLOCKED TERMINALS CAVITY WITH A NUMBER INDICATES BLOCKED TERMINAL POSITION CAVITY WITHOUT A NUMBER INDICATES OPEN TERMINAL POSITION								STATUS	COMMENTS	OPTIONAL ATTATCHMENTS SOLD SEPERATELY			
		HOUSING KEY/COLOR	GROMMET CAP	PLR	MAT SEAL	1	2	3	4	5	6	7	8			BACKSHELL WITH RIBS	BACKSHELL WITHOUT RIBS	90˚ ADAPTOR WITH RIBS	90˚ ADAPTOR WITHOUT RIBS
KEY A, BLACK, WITH CLIPSLOT	160011-4001	A-BLK-CLIP	GCO	PLR-1	M-R									PLANNED OBSOLECSENCE		34950-0811	34950-0821	34951-0831	34951-0841
KEY B, LIGHT GRAY, WITH CLIPSLOT	160011-4002	B-LG-CLIP	GCO	PLR-1	M-R									PLANNED OBSOLECSENCE		34950-0811	34950-0821	34951-0831	34951-0841
KEY C, DARK GRAY, WITH CLIPSLOT	160011-4003	C-DG-CLIP	GCO	PLR-1	M-R									PLANNED OBSOLECSENCE		34950-0811	34950-0821	34951-0831	34951-0841
KEY D, STONE GRAY, WITH CLIPSLOT	160011-4004	D-SG-CLIP	GCO	PLR-1	M-R									PLANNED OBSOLECSENCE		34950-0811	34950-0821	34951-0831	34951-0841
KEY A, BLACK, WITH CLIPSLOT	160011-4007	A-BLK-CLIP	GCP	PLR-1	M-R	1	2	3	4	5	6	7	8	PLANNED OBSOLECSENCE		34950-0811	34950-0821	34951-0831	34951-0841
KEY B, LIGHT GRAY, WITH CLIPSLOT	160011-4008	B-LG-CLIP	GCP	PLR-1	M-R	1	2	3	4	5	6	7	8	PLANNED OBSOLECSENCE		34950-0811	34950-0821	34951-0831	34951-0841
KEY C, DARK GRAY, WITH CLIPSLOT	160011-4009	C-DG-CLIP	GCP	PLR-1	M-R	1	2	3	4	5	6	7	8	PLANNED OBSOLECSENCE		34950-0811	34950-0821	34951-0831	34951-0841
KEY D, STONE GRAY, WITH CLIPSLOT	160011-4010	D-SG-CLIP	GCP	PLR-1	M-R	1	2	3	4	5	6	7	8	PLANNED OBSOLECSENCE		34950-0811	34950-0821	34951-0831	34951-0841
KEY A, BLACK, WITH CLIPSLOT	160011-4013	A-BLK-CLIP	GCP	PLR-1	M-R				4	5				PLANNED OBSOLECSENCE		34950-0811	34950-0821	34951-0831	34951-0841
KEY A, BLACK, WITH CLIPSLOT	160011-4014	A-BLK-CLIP	GCP	PLR-1	M-R					5	6		8	PLANNED OBSOLECSENCE		34950-0811	34950-0821	34951-0831	34951-0841
KEY A, BLACK, WITH CLIPSLOT	160011-4015	A-BLK-CLIP	GCP	PLR-1	M-R				4	5			8	SALEABLE		34950-0811	34950-0821	34951-0831	34951-0841
KEY A, BLACK, WITH CLIPSLOT	160121-4801	A-BLK-CLIP	GCO	PLR-3	M-B									OK TO TOOL		34950-0811	34950-0821	34951-0831	34951-0841
KEY B, LIGHT GRAY, WITH CLIPSLOT	160121-4802	B-LG-CLIP	GCO	PLR-3	M-B									OK TO TOOL		34950-0811	34950-0821	34951-0831	34951-0841
KEY A, BLACK, WITH CLIPSLOT	160121-4811	A-BLK-CLIP	GCP	PLR-3	M-B				4	5				OK TO TOOL		34950-0811	34950-0821	34951-0831	34951-0841
KEY A, BLACK, WITH CLIPSLOT	160121-4832	A-BLK-CLIP	GCP	PLR-3	M-B					5	6		8	OK TO TOOL		34950-0811	34950-0821	34951-0831	34951-0841
KEY A, BLACK, WITH CLIPSLOT	160121-4834	A-BLK-CLIP	GCP	PLR-3	M-B	1	2	3	4	5	6	7	8	OK TO TOOL		34950-0811	34950-0821	34951-0831	34951-0841
KEY B, LIGHT GRAY, WITH CLIPSLOT	160121-4847	B-LG-CLIP	GCP	PLR-3	M-B	1	2	3	4	5	6	7	8	OK TO TOOL		34950-0811	34950-0821	34951-0831	34951-0841
KEY C, DARK GRAY, WITH CLIPSLOT	160121-4852	C-DG-CLIP	GCO	PLR-3	M-B									OK TO TOOL		34950-0811	34950-0821	34951-0831	34951-0841
KEY D, STONE GRAY, WITH CLIPSLOT	160121-4853	D-SG-CLIP	GCO	PLR-3	M-B									OK TO TOOL		34950-0811	34950-0821	34951-0831	34951-0841
KEY A, BLACK, WITH CLIPSLOT	160121-4854	A-BLK-CLIP	GCP	PLR-3	M-B				4	5			8	OK TO TOOL		34950-0811	34950-0821	34951-0831	34951-0841

molex

MX150 GEN 2 BLADE 2X6 SEALED ASSEMBLY MAT SEAL
BOM AND PIN OUT SHEET

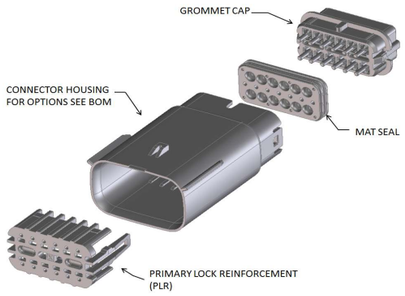

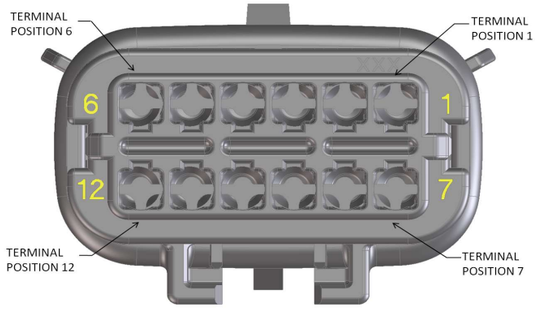

ABBREVIATION	DESCRIPTION	COLOR	MATERIAL
A-BLK-CLIP	HOUSING KEYING OPTION A WITH CLIPSLOT	BLACK	SPS/NYLON GF20
B-LG-CLIP	HOUSING KEYING OPTION B WITH CLIPSLOT	LIGHT GRAY	SPS/NYLON GF20
C-DG-CLIP	HOUSING KEYING OPTION C WITH CLIPSLOT	DARK GRAY	SPS/NYLON GF20
D-SG-CLIP	HOUSING KEYING OPTION D WITH CLIPSLOT	STONE GRAY	SPS/NYLON GF20
GCP	GROMMET CAP (PLUGGED)	BLACK	SPS/NYLON GF20
PLR-1	PLR-1	NATURAL	SPS/NYLON GF20
PLR-3	PLR-3	NATURAL	SPS/NYLON GF20
M-R	MAT SEAL	RUST RED	INHERENTLY LUBRICATED SILICONE
M-B	MAT SEAL	ROYAL BLUE	INHERENTLY LUBRICATED SILICONE

FOR ADDITIONAL INFORMATION SEE SD-160011-0001

ASSEMBLY DESCRIPTION	ASSEMBLY PART NUMBER	COMPONENT				BLOCKED TERMINALS												STATUS	COMMENTS	OPTIONAL ATTATCHMENTS SOLD SEPERATELY	
		THE PRESENCE OF AN ABBREVIATION INDICATES THE PRESENCE OF THAT COMPONENT.				CAVITY WITH A NUMBER INDICATES BLOCKED TERMINAL POSITION CAVITY WITHOUT A NUMBER INDICATES OPEN TERMINAL POSITION															
		HOUSING KEY/COLOR	GROMMET CAP	PLR	MAT SEAL	1	2	3	4	5	6	7	8	9	10	11	12			BACKSHELL WITH RIBS	BACKSHELL WITHOUT RIBS
KEY A, BLACK, WITH CLIPSLOT	160011-6001	A-BLK-CLIP	GCP	PLR-1	M-R													PLANNED OBSOLESCENCE		34950-1210	34950-1220
KEY B, LIGHT GRAY, WITH CLIPSLOT	160011-6002	B-LG-CLIP	GCP	PLR-1	M-R													PLANNED OBSOLESCENCE		34950-1210	34950-1220
KEY C, DARK GRAY, WITH CLIPSLOT	160011-6003	C-DG-CLIP	GCP	PLR-1	M-R													PLANNED OBSOLESCENCE		34950-1210	34950-1220
KEY D, STONE GRAY, WITH CLIPSLOT	160011-6004	D-SG-CLIP	GCP	PLR-1	M-R													PLANNED OBSOLESCENCE		34950-1210	34950-1220
KEY A, BLACK, WITH CLIPSLOT	160011-6007	A-BLK-CLIP	GCP	PLR-1	M-R	1	2	3	4	5	6	7	8	9	10	11	12	PLANNED OBSOLESCENCE		34950-1210	34950-1220
KEY B, LIGHT GRAY, WITH CLIPSLOT	160011-6008	B-LG-CLIP	GCP	PLR-1	M-R	1	2	3	4	5	6	7	8	9	10	11	12	PLANNED OBSOLESCENCE		34950-1210	34950-1220
KEY C, DARK GRAY, WITH CLIPSLOT	160011-6009	C-DG-CLIP	GCP	PLR-1	M-R	1	2	3	4	5	6	7	8	9	10	11	12	PLANNED OBSOLESCENCE		34950-1210	34950-1220
KEY D, STONE GRAY, WITH CLIPSLOT	160011-6010	D-SG-CLIP	GCP	PLR-1	M-R	1	2	3	4	5	6	7	8	9	10	11	12	PLANNED OBSOLESCENSE		34950-1210	34950-1220
KEY A, BLACK, WITH CLIPSLOT	160121-6201	A-BLK-CLIP	GCP	PLR-3	M-B													OK TO TOOL		34950-1210	34950-1220
KEY B, LIGHT GRAY, WITH CLIPSLOT	160121-6202	B-LG-CLIP	GCP	PLR-3	M-B													OK TO TOOL		34950-1210	34950-1220
KEY A, BLACK, WITH CLIPSLOT	160121-6227	A-BLK-CLIP	GCP	PLR-3	M-B	1	2	3	4	5	6	7	8	9	10	11	12	OK TO TOOL		34950-1210	34950-1220
KEY B, LIGHT GRAY, WITH CLIPSLOT	160121-6228	B-LG-CLIP	GCP	PLR-3	M-B	1	2	3	4	5	6	7	8	9	10	11	12	OK TO TOOL		34950-1210	34950-1220
KEY C, DARK GRAY, WITH CLIPSLOT	160121-6261	C-DG-CLIP	GCP	PLR-3	M-B													OK TO TOOL		34950-1210	34950-1220
KEY D, STONE GRAY, WITH CLIPSLOT	160121-6262	D-SG-CLIP	GCP	PLR-3	M-B													OK TO TOOL		34950-1210	34950-1220
KEY C, DARK GRAY, WITH CLIPSLOT	160121-6263	C-DG-CLIP	GCP	PLR-3	M-B	1	2	3	4	5	6	7	8	9	10	11	12	OK TO TOOL		34950-1210	34950-1220
KEY D, STONE GRAY, WITH CLIPSLOT	160121-6264	D-SG-CLIP	GCP	PLR-3	M-B	1	2	3	4	5	6	7	8	9	10	11	12	OK TO TOOL		34950-1210	34950-1220

molex

MX150 GEN 2 BLADE 2X10 SEALED ASSEMBLY MAT SEAL
BOM AND PIN OUT SHEET

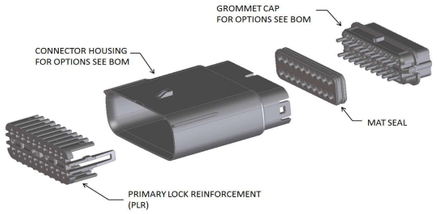

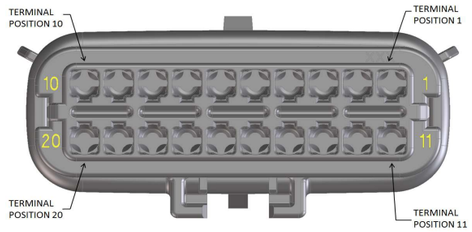

ABBREVIATION	DESCRIPTION	COLOR	MATERIAL
A-BLK-CLIP	HOUSING KEYING OPTION A WITH CLIPSLOT	BLACK	SPS/NYLON GF20
B-LG-CLIP	HOUSING KEYING OPTION B WITH CLIPSLOT	LIGHT GRAY	SPS/NYLON GF20
C-DG-CLIP	HOUSING KEYING OPTION C WITH CLIPSLOT	DARK GRAY	SPS/NYLON GF20
D-SG-CLIP	HOUSING KEYING OPTION D WITH CLIPSLOT	STONE GRAY	SPS/NYLON GF20
GCP	GROMMET CAP (PLUGGED)	BLACK	SPS/NYLON GF20
GCO	GROMMET CAP (OPEN)	BLACK	SPS/NYLON GF20
PLR-3	PLR-3	NATURAL	SPS/NYLON GF20
M	MAT SEAL	LIGHT BLUE	INHERENTLY LUBRICATED SILICONE

FOR ADDITIONAL INFORMATION SEE SD-160011-0001

ASSEMBLY DESCRIPTION	ASSEMBLY PART NUMBER	COMPONENT				BLOCKED TERMINALS																				STATUS	COMMENTS	OPTIONAL ATTATCHMENTS SOLD SEPERATELY			
		THE PRESENCE OF AN ABBREVIATION INDICATES THE PRESENCE OF THAT COMPONENT.				CAVITY WITH A NUMBER INDICATES BLOCKED TERMINAL POSITION CAVITY WITHOUT A NUMBER INDICATES OPEN TERMINAL POSITION																									
		HOUSING KEY/COLOR	GROMMET CAP	PLR	MAT SEAL	1	2	3	4	5	6	7	8	9	10	11	12	13	14	15	16	17	18	19	20			BACKSHELL WITH RIBS	BACKSHELL WITHOUT RIBS	90˚ ADAPTOR WITH RIBS	90˚ ADAPTOR WITHOUT RIBS
KEY A, BLACK, WITH CLIPSLOT	160121-2101	A-BLK-CLIP	GCO	PLR-3	M																					SALEABLE		34950-2011	34950-2021	34951-1631	34951-1641
KEY B, LIGHT GRAY, WITH CLIPSLOT	160121-2102	B-LG-CLIP	GCO	PLR-3	M																					SALEABLE		34950-2011	34950-2021	34951-1631	34951-1641
KEY A, BLACK, WITH CLIPSLOT	160121-2106	A-BLK-CLIP	GCP	PLR-3	M																				20	SALEABLE		34950-2011	34950-2021	34951-1631	34951-1641
KEY A, BLACK, WITH CLIPSLOT	160121-2107	A-BLK-CLIP	GCP	PLR-3	M											11										SALEABLE		34950-2011	34950-2021	34951-1631	34951-1641
KEY A, BLACK, WITH CLIPSLOT	160121-2108	A-BLK-CLIP	GCP	PLR-3	M				4	5	6	7							14	15	16	17				SALEABLE		34950-2011	34950-2021	34951-1631	34951-1641
KEY A, BLACK, WITH CLIPSLOT	160121-2109	A-BLK-CLIP	GCP	PLR-3	M							7									16					SALEABLE		34950-2011	34950-2021	34951-1631	34951-1641
KEY A, BLACK, WITH CLIPSLOT	160121-2122	A-BLK-CLIP	GCP	PLR-3	M			3	4						10				14			17		19		SALEABLE		34950-2011	34950-2021	34951-1631	34951-1641
KEY A, BLACK, WITH CLIPSLOT	160121-2125	A-BLK-CLIP	GCP	PLR-3	M										10				14			17		19		SALEABLE		34950-2011	34950-2021	34951-1631	34951-1641
KEY A, BLACK, WITH CLIPSLOT	160121-2126	A-BLK-CLIP	GCP	PLR-3	M				4	5					10				14	15		17		19		SALEABLE		34950-2011	34950-2021	34951-1631	34951-1641
KEY A, BLACK, WITH CLIPSLOT	160121-2127	A-BLK-CLIP	GCP	PLR-3	M				4	5					10				14	15		17	18	19		SALEABLE		34950-2011	34950-2021	34951-1631	34951-1641
KEY A, BLACK, WITH CLIPSLOT	160121-2128	A-BLK-CLIP	GCP	PLR-3	M	1		3	4	5	6	7	8	9	10	11		13	14	15	16	17	18	19	20	SALEABLE		34950-2011	34950-2021	34951-1631	34951-1641
KEY A, BLACK, WITH CLIPSLOT	160121-2129	A-BLK-CLIP	GCP	PLR-3	M				4	5	6	7									16	17				SALEABLE		34950-2011	34950-2021	34951-1631	34951-1641
KEY A, BLACK, WITH CLIPSLOT	160121-2130	A-BLK-CLIP	GCP	PLR-3	M			3	4	5								13	14	15			18	19		SALEABLE		34950-2011	34950-2021	34951-1631	34951-1641
KEY A, BLACK, WITH CLIPSLOT	160121-2131	A-BLK-CLIP	GCP	PLR-3	M				4			7									16					SALEABLE		34950-2011	34950-2021	34951-1631	34951-1641
KEY A, BLACK, WITH CLIPSLOT	160121-2147	A-BLK-CLIP	GCP	PLR-3	M			3	4	5					10			13	14	15		17	18	19		SALEABLE		34950-2011	34950-2021	34951-1631	34951-1641
KEY A, BLACK, WITH CLIPSLOT	160121-2133	A-BLK-CLIP	GCP	PLR-3	M										10							17		19		SALEABLE		34950-2011	34950-2021	34951-1631	34951-1641
KEY A, BLACK, WITH CLIPSLOT	160121-2134	A-BLK-CLIP	GCP	PLR-3	M																	17	18	19	20	SALEABLE		34950-2011	34950-2021	34951-1631	34951-1641
KEY A, BLACK, WITH CLIPSLOT	160121-2135	A-BLK-CLIP	GCP	PLR-3	M																16	17	18	19	20	SALEABLE		34950-2011	34950-2021	34951-1631	34951-1641
KEY A, BLACK, WITH CLIPSLOT	160121-2136	A-BLK-CLIP	GCP	PLR-3	M							7		9								17	18	19	20	SALEABLE		34950-2011	34950-2021	34951-1631	34951-1641
KEY A, BLACK, WITH CLIPSLOT	160121-2137	A-BLK-CLIP	GCP	PLR-3	M							7		9												SALEABLE		34950-2011	34950-2021	34951-1631	34951-1641
KEY A, BLACK, WITH CLIPSLOT	160121-2138	A-BLK-CLIP	GCP	PLR-3	M	1	2	3	4	5	6	7	8	9	10		12					17		19		SALEABLE		34950-2011	34950-2021	34951-1631	34951-1641
KEY A, BLACK, WITH CLIPSLOT	160121-2139	A-BLK-CLIP	GCP	PLR-3	M	1	2	3	4	5	6	7	8		10							17		19		SALEABLE		34950-2011	34950-2021	34951-1631	34951-1641
KEY A, BLACK, WITH CLIPSLOT	160121-2140	A-BLK-CLIP	GCP	PLR-3	M							7										17			20	SALEABLE		34950-2011	34950-2021	34951-1631	34951-1641
KEY A, BLACK, WITH CLIPSLOT	160121-2142	A-BLK-CLIP	GCP	PLR-3	M										10				14			17	18	19		SALEABLE		34950-2011	34950-2021	34951-1631	34951-1641
KEY A, BLACK, WITH CLIPSLOT	160121-2132	A-BLK-CLIP	GCP	PLR-3	M			3	4	5								13		15			18	19		SALEABLE		34950-2011	34950-2021	34951-1631	34951-1641
KEY B, LIGHT GRAY, WITH CLIPSLOT	160121-2156	B-LG-CLIP	GCP	PLR-3	M			3		5				9	10											SALEABLE		34950-2011	34950-2021	34951-1631	34951-1641
KEY B, LIGHT GRAY, WITH CLIPSLOT	160121-2157	B-LG-CLIP	GCP	PLR-3	M			3	4	5				9	10	11	12	13	14	15	16	17	18	19	20	SALEABLE		34950-2011	34950-2021	34951-1631	34951-1641
KEY B, LIGHT GRAY, WITH CLIPSLOT	160121-2158	B-LG-CLIP	GCP	PLR-3	M			3		5				9	10	11	12	13	14							SALEABLE		34950-2011	34950-2021	34951-1631	34951-1641
KEY A, BLACK, WITH CLIPSLOT	160121-2168	A-BLK-CLIP	GCP	PLR-3	M			3	4	5		7						13		15			18	19		SALEABLE		34950-2011	34950-2021	34951-1631	34951-1641
KEY A, BLACK, WITH CLIPSLOT	160121-2169	A-BLK-CLIP	GCP	PLR-3	M							7			10				14			17	18	19		SALEABLE		34950-2011	34950-2021	34951-1631	34951-1641
KEY A, BLACK, WITH CLIPSLOT	160121-2171	A-BLK-CLIP	GCP	PLR-3	M											11						17		19		SALEABLE		34950-2011	34950-2021	34951-1631	34951-1641
KEY A, BLACK, WITH CLIPSLOT	160121-2172	A-BLK-CLIP	GCP	PLR-3	M	1	2	3	4	5	6	7	8			11						17		19		SALEABLE		34950-2011	34950-2021	34951-1631	34951-1641
KEY A, BLACK, WITH CLIPSLOT	160121-2173	A-BLK-CLIP	GCP	PLR-3	M								8							15						SALEABLE		34950-2011	34950-2021	34951-1631	34951-1641
KEY A, BLACK, WITH CLIPSLOT	160121-2177	A-BLK-CLIP	GCP	PLR-3	M													13			16			19	20	SALEABLE		34950-2011	34950-2021	34951-1631	34951-1641
KEY A, BLACK, WITH CLIPSLOT	160121-2178	A-BLK-CLIP	GCP	PLR-3	M				4										14					19		SALEABLE		34950-2011	34950-2021	34951-1631	34951-1641
KEY A, BLACK, WITH CLIPSLOT	160121-2179	A-BLK-CLIP	GCP	PLR-3	M				4	5	6	7	8	9	10				14	15	16	17	18	19	20	SALEABLE		34950-2011	34950-2021	34951-1631	34951-1641
KEY A, BLACK, WITH CLIPSLOT	160121-2185	A-BLK-CLIP	GCP	PLR-3	M	1																		19		SALEABLE		34950-2011	34950-2021	34951-1631	34951-1641
KEY A, BLACK, WITH CLIPSLOT	160121-2187	A-BLK-CLIP	GCP	PLR-3	M	1											12	13						19		SALEABLE		34950-2011	34950-2021	34951-1631	34951-1641
KEY A, BLACK, WITH CLIPSLOT	160121-2188	A-BLK-CLIP	GCP	PLR-3	M	1				5	6	7	8				12	13		15				19		SALEABLE		34950-2011	34950-2021	34951-1631	34951-1641
KEY A, BLACK, WITH CLIPSLOT	160121-2189	A-BLK-CLIP	GCP	PLR-3	M	1	2	3	4	5	6	7	8	9			12	13	14	15	16			19		SALEABLE		34950-2011	34950-2021	34951-1631	34951-1641
KEY A, BLACK, WITH CLIPSLOT	160121-2190	A-BLK-CLIP	GCP	PLR-3	M	1	2	3	4	5	6	7	8	9	10	11	12	13	14	15	16			19	20	SALEABLE		34950-2011	34950-2021	34951-1631	34951-1641
KEY A, BLACK, WITH CLIPSLOT	160121-2191	A-BLK-CLIP	GCP	PLR-3	M	1	2	3	4	5	6		8		10			13			16			19	20	SALEABLE		34950-2011	34950-2021	34951-1631	34951-1641
KEY A, BLACK, WITH CLIPSLOT	160121-2192	A-BLK-CLIP	GCP	PLR-3	M		2						8					13			16			19	20	SALEABLE		34950-2011	34950-2021	34951-1631	34951-1641
KEY A, BLACK, WITH CLIPSLOT	160121-2193	A-BLK-CLIP	GCP	PLR-3	M	1	2	3	4	5	6	7	8	9	10			13			16			19	20	SALEABLE		34950-2011	34950-2021	34951-1631	34951-1641
KEY A, BLACK, WITH CLIPSLOT	160121-2194	A-BLK-CLIP	GCP	PLR-3	M	1	2	3	4	5	6		8	9	10			13			16			19	20	SALEABLE		34950-2011	34950-2021	34951-1631	34951-1641
KEY A, BLACK, WITH CLIPSLOT	160121-2195	A-BLK-CLIP	GCP	PLR-3	M		2											13			16			19	20	SALEABLE		34950-2011	34950-2021	34951-1631	34951-1641
KEY B, LIGHT GRAY, WITH CLIPSLOT	160121-2196	B-LG-CLIP	GCP	PLR-3	M	1	2	3	4	5	6	7	8			11						17		19		SALEABLE		34950-2011	34950-2021	34951-1631	34951-1641
KEY B, LIGHT GRAY, WITH CLIPSLOT	160121-2197	B-LG-CLIP	GCP	PLR-3	M											11						17		19		SALEABLE		34950-2011	34950-2021	34951-1631	34951-1641
KEY A, BLACK, WITH CLIPSLOT	160121-2198	A-BLK-CLIP	GCP	PLR-3	M	1	2	3				7		9							16			19	20	SALEABLE		34950-2011	34950-2021	34951-1631	34951-1641
KEY A, BLACK, WITH CLIPSLOT	160121-2199	A-BLK-CLIP	GCP	PLR-3	M	1	2	3	4	5		7	8	9				13	14	15	16			19	20	SALEABLE		34950-2011	34950-2021	34951-1631	34951-1641
KEY A, BLACK, WITH CLIPSLOT	160121-2204	A-BLK-CLIP	GCP	PLR-3	M				4	5	6						12			15	16	17	18	19		SALEABLE		34950-2011	34950-2021	34951-1631	34951-1641
KEY A, BLACK, WITH CLIPSLOT	160121-2203	A-BLK-CLIP	GCP	PLR-3	M	1	2	3						9										19	20	SALEABLE		34950-2011	34950-2021	34951-1631	34951-1641
KEY A, BLACK, WITH CLIPSLOT	160121-2202	A-BLK-CLIP	GCP	PLR-3	M		2	3	4	5			8	9							16				20	SALEABLE		34950-2011	34950-2021	34951-1631	34951-1641
KEY A, BLACK, WITH CLIPSLOT	160121-2052	A-BLK-CLIP	GCP	PLR-3	M	1	2	3	4	5	6	7	8	9	10	11	12	13	14	15	16	17	18	19	20	SALEABLE		34950-2011	34950-2021	34951-1631	34951-1641
KEY A, BLACK, WITH CLIPSLOT	160121-2210	A-BLK-CLIP	GCP	PLR-3	M									9	10	11	12				16				20	SALEABLE		34950-2011	34950-2021	34951-1631	34951-1641
KEY A, BLACK, WITH CLIPSLOT	160121-2214	A-BLK-CLIP	GCP	PLR-3	M																16					SALEABLE		34950-2011	34950-2021	34951-1631	34951-1641
KEY A, BLACK, WITH CLIPSLOT	160121-2215	A-BLK-CLIP	GCP	PLR-3	M		2						8		10							17		19		SALEABLE		34950-2011	34950-2021	34951-1631	34951-1641
KEY A, BLACK, WITH CLIPSLOT	160121-2216	A-BLK-CLIP	GCP	PLR-3	M																16				20	SALEABLE		34950-2011	34950-2021	34951-1631	34951-1641
KEY A, BLACK, WITH CLIPSLOT	160121-2218	A-BLK-CLIP	GCP	PLR-3	M	1	2	3	4	5	6													19	20	SALEABLE		34950-2011	34950-2021	34951-1631	34951-1641
KEY A, BLACK, WITH CLIPSLOT	160121-2219	A-BLK-CLIP	GCP	PLR-3	M						6														20	SALEABLE		34950-2011	34950-2021	34951-1631	34951-1641
KEY A, BLACK, WITH CLIPSLOT	160121-2222	A-BLK-CLIP	GCP	PLR-3	M	1	2	3						9							16				20	SALEABLE		34950-2011	34950-2021	34951-1631	34951-1641
KEY A, BLACK, WITH CLIPSLOT	160121-2224	A-BLK-CLIP	GCP	PLR-3	M										10				14	15		17		19		SALEABLE		34950-2011	34950-2021	34951-1631	34951-1641
KEY A, BLACK, WITH CLIPSLOT	160121-2225	A-BLK-CLIP	GCP	PLR-3	M	1	2	3	4	5	6		8		10							17	18	19	20	SALEABLE		34950-2011	34950-2021	34951-1631	34951-1641
KEY A, BLACK, WITH CLIPSLOT	160121-2227	A-BLK-CLIP	GCP	PLR-3	M			3							10			13	14			17	18	19	20	SALEABLE		34950-2011	34950-2021	34951-1631	34951-1641
KEY A, BLACK, WITH CLIPSLOT	160121-2228	A-BLK-CLIP	GCP	PLR-3	M			3	4	5	6	7	8	9	10			13	14			17	18	19	20	SALEABLE		34950-2011	34950-2021	34951-1631	34951-1641
KEY A, BLACK, WITH CLIPSLOT	160121-2229	A-BLK-CLIP	GCP	PLR-3	M			3	4	5	6	7	8	9	10			13	14			17	18	19		SALEABLE		34950-2011	34950-2021	34951-1631	34951-1641
KEY A, BLACK, WITH CLIPSLOT	160121-2230	A-BLK-CLIP	GCP	PLR-3	M			3							10			13	14			17	18	19		SALEABLE		34950-2011	34950-2021	34951-1631	34951-1641
KEY A, BLACK, WITH CLIPSLOT	160121-2231	A-BLK-CLIP	GCP	PLR-3	M	1	2	3	4	5	6		8		10								18		20	SALEABLE		34950-2011	34950-2021	34951-1631	34951-1641
KEY A, BLACK, WITH CLIPSLOT	160121-2232	A-BLK-CLIP	GCP	PLR-3	M																		18		20	SALEABLE		34950-2011	34950-2021	34951-1631	34951-1641
KEY B, LIGHT GRAY, WITH CLIPSLOT	160121-2234	B-LG-CLIP	GCP	PLR-3	M											11	12	13				17		19		SALEABLE		34950-2011	34950-2021	34951-1631	34951-1641
KEY B, LIGHT GRAY, WITH CLIPSLOT	160121-2235	B-LG-CLIP	GCP	PLR-3	M		2	3									12	13						19		SALEABLE		34950-2011	34950-2021	34951-1631	34951-1641
KEY A, BLACK, WITH CLIPSLOT	160121-2236	A-BLK-CLIP	GCP	PLR-3	M			3	4		6	7	8	9			12	13	14	15	16	17				SALEABLE		34950-2011	34950-2021	34951-1631	34951-1641
KEY A, BLACK, WITH CLIPSLOT	160121-2237	A-BLK-CLIP	GCP	PLR-3	M			3	4	5	6	7											18	19		SALEABLE		34950-2011	34950-2021	34951-1631	34951-1641
KEY A, BLACK, WITH CLIPSLOT	160121-2238	A-BLK-CLIP	GCP	PLR-3	M					5													18	19		SALEABLE		34950-2011	34950-2021	34951-1631	34951-1641
KEY A, BLACK, WITH CLIPSLOT	160121-2239	A-BLK-CLIP	GCP	PLR-3	M			3	4	5	6	7			10								18	19	20	SALEABLE		34950-2011	34950-2021	34951-1631	34951-1641
KEY A, BLACK, WITH CLIPSLOT	160121-2240	A-BLK-CLIP	GCP	PLR-3	M					5					10								18	19	20	SALEABLE		34950-2011	34950-2021	34951-1631	34951-1641
KEY A, BLACK, WITH CLIPSLOT	160121-2241	A-BLK-CLIP	GCP	PLR-3	M			3	4		6	7	8	9	10		12	13	14	15	16	17			20	SALEABLE		34950-2011	34950-2021	34951-1631	34951-1641
KEY A, BLACK, WITH CLIPSLOT	160121-2242	A-BLK-CLIP	GCP	PLR-3	M	1	2	3	4	5	6		8		10											SALEABLE		34950-2011	34950-2021	34951-1631	34951-1641
KEY A, BLACK, WITH CLIPSLOT	160121-2243	A-BLK-CLIP	GCP	PLR-3	M	1	2	3					8	9			12	13	14	15	16	17	18	19	20	SALEABLE		34950-2011	34950-2021	34951-1631	34951-1641
KEY A, BLACK, WITH CLIPSLOT	160121-2244	A-BLK-CLIP	GCP	PLR-3	M	1	2	3				7	8	9	10		12	13	14	15	16	17	18	19	20	SALEABLE		34950-2011	34950-2021	34951-1631	34951-1641
KEY A, BLACK, WITH CLIPSLOT	160121-2245	A-BLK-CLIP	GCP	PLR-3	M		2	3				7	8	9	10		12	13	14	15	16	17	18		20	SALEABLE		34950-2011	34950-2021	34951-1631	34951-1641
KEY A, BLACK, WITH CLIPSLOT	160121-2246	A-BLK-CLIP	GCP	PLR-3	M	1	2	3	4	5			8	9			12	13	14	15	16	17	18	19	20	SALEABLE		34950-2011	34950-2021	34951-1631	34951-1641
KEY A, BLACK, WITH CLIPSLOT	160121-2247	A-BLK-CLIP	GCP	PLR-3	M	1	2	3	4	5		7	8	9	10		12	13	14	15	16	17	18	19	20	SALEABLE		34950-2011	34950-2021	34951-1631	34951-1641
KEY A, BLACK, WITH CLIPSLOT	160121-2253	A-BLK-CLIP	GCP	PLR-3	M	1	2	3						9	10	11	12				16				20	SALEABLE		34950-2011	34950-2021	34951-1631	34951-1641
KEY A, BLACK, WITH CLIPSLOT	160121-2254	A-BLK-CLIP	GCP	PLR-3	M	1								9	10	11					16			19	20	SALEABLE		34950-2011	34950-2021	34951-1631	34951-1641
KEY A, BLACK, WITH CLIPSLOT	160121-2255	A-BLK-CLIP	GCP	PLR-3	M	1	2	3	4	5		7	8	9							16	17	18	19	20	SALEABLE		34950-2011	34950-2021	34951-1631	34951-1641
KEY A, BLACK, WITH CLIPSLOT	160121-2256	A-BLK-CLIP	GCP	PLR-3	M	1	2	3				7		9				13	14	15	16			19	20	SALEABLE		34950-2011	34950-2021	34951-1631	34951-1641
KEY A, BLACK, WITH CLIPSLOT	160121-2257	A-BLK-CLIP	GCP	PLR-3	M	1	2	3	4	5		7	8	9							16			19	20	SALEABLE		34950-2011	34950-2021	34951-1631	34951-1641
KEY A, BLACK, WITH CLIPSLOT	160121-2258	A-BLK-CLIP	GCP	PLR-3	M	1	2	3				7		9	10	11	12				16			19	20	SALEABLE		34950-2011	34950-2021	34951-1631	34951-1641
KEY A, BLACK, WITH CLIPSLOT	160121-2259	A-BLK-CLIP	GCP	PLR-3	M	1	2	3	4	5	6		8	9							16				20	SALEABLE		34950-2011	34950-2021	34951-1631	34951-1641
KEY A, BLACK, WITH CLIPSLOT	160121-2260	A-BLK-CLIP	GCP	PLR-3	M	1	2	3			6			9	10	11	12	13	14	15	16				20	SALEABLE		34950-2011	34950-2021	34951-1631	34951-1641
KEY A, BLACK, WITH CLIPSLOT	160121-2263	A-BLK-CLIP	GCP	PLR-3	M	1	2	3	4	5	6	7	8		10				14	15		17		19		SALEABLE		34950-2011	34950-2021	34951-1631	34951-1641
KEY B, LIGHT GRAY, WITH CLIPSLOT	160121-2233	B-LG-CLIP	GCP	PLR-3	M	1	2	3	4	5	6	7	8			11	12	13				17		19		SALEABLE		34950-2011	34950-2021	34951-1631	34951-1641
KEY A, BLACK, WITH CLIPSLOT	160121-2266	A-BLK-CLIP	GCP	PLR-3	M			3													16	17	18	19	20	SALEABLE		34950-2011	34950-2021	34951-1631	34951-1641
KEY A, BLACK, WITH CLIPSLOT	160121-2324	A-BLK-CLIP	GCP	PLR-3	M	1	2	3	4	5	6	7	8		10	11			14			17	18	19		SALEABLE		34950-2011	34950-2021	34951-1631	34951-1641
KEY B, LIGHT GRAY, WITH CLIPSLOT	160121-2325	B-LG-CLIP	GCP	PLR-3	M																	17	18	19	20	SALEABLE		34950-2011	34950-2021	34951-1631	34951-1641
KEY A, BLACK, WITH CLIPSLOT	160121-2326	A-BLK-CLIP	GCP	PLR-3	M				4	5	6	7	8	9	10	11	12	13	14	15						SALEABLE		34950-2011	34950-2021	34951-1631	34951-1641
KEY A, BLACK, WITH CLIPSLOT	160121-2327	A-BLK-CLIP	GCP	PLR-3	M					5	6	7	8			11	12	13	14	15						SALEABLE		34950-2011	34950-2021	34951-1631	34951-1641
KEY A, BLACK, WITH CLIPSLOT	160121-2328	A-BLK-CLIP	GCP	PLR-3	M					5	6	7	8			11	12			15						SALEABLE		34950-2011	34950-2021	34951-1631	34951-1641

molex

MX150 GEN 2 BLADE 2X10 SEALED ASSEMBLY MAT SEAL
BOM AND PIN OUT SHEET

ASSEMBLY DESCRIPTION	ASSEMBLY PART NUMBER	COMPONENT				BLOCKED TERMINALS																				STATUS	COMMENTS	OPTIONAL ATTATCHMENTS SOLD SEPERATELY			
		THE PRESENCE OF AN ABBREVIATION INDICATES THE PRESENCE OF THAT COMPONENT.				CAVITY WITH A NUMBER INDICATES BLOCKED TERMINAL POSITION CAVITY WITHOUT A NUMBER INDICATES OPEN TERMINAL POSITION																										
		HOUSING KEY/COLOR	GROMMET CAP	PLR	MAT SEAL	1	2	3	4	5	6	7	8	9	10	11	12	13	14	15	16	17	18	19	20			BACKSHELL WITH RIBS	BACKSHELL WITHOUT RIBS	90˚ ADAPTOR WITH RIBS	90˚ ADAPTOR WITHOUT RIBS
KEY A, BLACK, WITH CLIPSLOT	160121-2329	A-BLK-CLIP	GCP	PLR-3	M					5	6	7	8			11	12									SALEABLE		34950-2011	34950-2021	34951-1631	34951-1641
KEY A, BLACK, WITH CLIPSLOT	160121-2330	A-BLK-CLIP	GCP	PLR-3	M					5	6	7	8	9	10	11	12	13	14	15						SALEABLE		34950-2011	34950-2021	34951-1631	34951-1641
KEY A, BLACK, WITH CLIPSLOT	160121-2331	A-BLK-CLIP	GCP	PLR-3	M					5	6	7	8													SALEABLE		34950-2011	34950-2021	34951-1631	34951-1641
KEY A, BLACK, WITH CLIPSLOT	160121-2332	A-BLK-CLIP	GCP	PLR-3	M					5	6	7											18	19		SALEABLE		34950-2011	34950-2021	34951-1631	34951-1641
KEY A, BLACK, WITH CLIPSLOT	160121-2333	A-BLK-CLIP	GCP	PLR-3	M					5	6	7				11	12	13	14	15			18	19		SALEABLE		34950-2011	34950-2021	34951-1631	34951-1641
KEY A, BLACK, WITH CLIPSLOT	160121-2334	A-BLK-CLIP	GCP	PLR-3	M	1		3	4	5														19		SALEABLE		34950-2011	34950-2021	34951-1631	34951-1641
KEY B, LIGHT GRAY, WITH CLIPSLOT	160121-2335	B-LG-CLIP	GCP	PLR-3	M		2		4															19	20	SALEABLE		34950-2011	34950-2021	34951-1631	34951-1641
KEY A, BLACK, WITH CLIPSLOT	160121-2336	A-BLK-CLIP	GCP	PLR-3	M	1	2	3				7	8		10	11						17	18	19	20	SALEABLE		34950-2011	34950-2021	34951-1631	34951-1641
KEY A, BLACK, WITH CLIPSLOT	160121-2337	A-BLK-CLIP	GCP	PLR-3	M	1		3					8			11						17	18	19	20	SALEABLE		34950-2011	34950-2021	34951-1631	34951-1641
KEY A, BLACK, WITH CLIPSLOT	160121-2338	A-BLK-CLIP	GCP	PLR-3	M		2	3				7			10	11						17	18	19	20	SALEABLE		34950-2011	34950-2021	34951-1631	34951-1641
KEY A, BLACK, WITH CLIPSLOT	160121-2339	A-BLK-CLIP	GCP	PLR-3	M		2					7			10							17	18	19	20	SALEABLE		34950-2011	34950-2021	34951-1631	34951-1641
KEY A, BLACK, WITH CLIPSLOT	160121-2340	A-BLK-CLIP	GCP	PLR-3	M			3								11						17	18	19	20	SALEABLE		34950-2011	34950-2021	34951-1631	34951-1641
KEY A, BLACK, WITH CLIPSLOT	160121-2341	A-BLK-CLIP	GCP	PLR-3	M	1	2	3			6	7	8		10	11						17	18	19	20	SALEABLE		34950-2011	34950-2021	34951-1631	34951-1641
KEY A, BLACK, WITH CLIPSLOT	160121-2342	A-BLK-CLIP	GCP	PLR-3	M		2	3			6	7			10	11						17	18	19	20	SALEABLE		34950-2011	34950-2021	34951-1631	34951-1641
KEY A, BLACK, WITH CLIPSLOT	160121-2343	A-BLK-CLIP	GCP	PLR-3	M		2				6	7			10							17	18	19	20	SALEABLE		34950-2011	34950-2021	34951-1631	34951-1641
KEY A, BLACK, WITH CLIPSLOT	160121-2344	A-BLK-CLIP	GCP	PLR-3	M						6											17	18	19	20	SALEABLE		34950-2011	34950-2021	34951-1631	34951-1641
KEY A, BLACK, WITH CLIPSLOT	160121-2345	A-BLK-CLIP	GCP	PLR-3	M	1	2				6	7	8		10							17	18	19	20	SALEABLE		34950-2011	34950-2021	34951-1631	34951-1641
KEY A, BLACK, WITH CLIPSLOT	160121-2346	A-BLK-CLIP	GCP	PLR-3	M					5	6	7	8	9												SALEABLE		34950-2011	34950-2021	34951-1631	34951-1641
KEY A, BLACK, WITH CLIPSLOT	160121-2347	A-BLK-CLIP	GCP	PLR-3	M		2	3	4	5	6	7	8	9		11		13	14					19	20	SALEABLE		34950-2011	34950-2021	34951-1631	34951-1641
KEY A, BLACK, WITH CLIPSLOT	160121-2348	A-BLK-CLIP	GCP	PLR-3	M				4	5	6	7		9	10	11	12	13	14	15			18	19		SALEABLE		34950-2011	34950-2021	34951-1631	34951-1641
KEY A, BLACK, WITH CLIPSLOT	160121-2349	A-BLK-CLIP	GCP	PLR-3	M				4	5	6	7		9	10	11	12						18	19		SALEABLE		34950-2011	34950-2021	34951-1631	34951-1641
KEY A, BLACK, WITH CLIPSLOT	160121-2350	A-BLK-CLIP	GCP	PLR-3	M					5	6	7				11	12						18	19		SALEABLE		34950-2011	34950-2021	34951-1631	34951-1641
KEY B, LIGHT GRAY, WITH CLIPSLOT	160121-2351	B-LG-CLIP	GCP	PLR-3	M											11	12	13	14	15	16	17	18	19	20	SALEABLE		34950-2011	34950-2021	34951-1631	34951-1641
KEY B, LIGHT GRAY, WITH CLIPSLOT	160121-2352	B-LG-CLIP	GCP	PLR-3	M		2			5			8			11		13	14	15	16	17	18	19	20	SALEABLE		34950-2011	34950-2021	34951-1631	34951-1641
KEY B, LIGHT GRAY, WITH CLIPSLOT	160121-2353	B-LG-CLIP	GCP	PLR-3	M															15				19	20	SALEABLE		34950-2011	34950-2021	34951-1631	34951-1641
KEY B, LIGHT GRAY, WITH CLIPSLOT	160121-2354	B-LG-CLIP	GCP	PLR-3	M																16	17	18	19	20	SALEABLE		34950-2011	34950-2021	34951-1631	34951-1641
KEY B, LIGHT GRAY, WITH CLIPSLOT	160121-2355	B-LG-CLIP	GCP	PLR-3	M		2								10	11	12	13		15	16	17	18	19	20	SALEABLE		34950-2011	34950-2021	34951-1631	34951-1641
KEY A, BLACK, WITH CLIPSLOT	160121-2356	A-BLK-CLIP	GCP	PLR-3	M	1	2											13	14	15			18	19	20	SALEABLE		34950-2011	34950-2021	34951-1631	34951-1641
KEY A, BLACK, WITH CLIPSLOT	160121-2357	A-BLK-CLIP	GCP	PLR-3	M				4	5	6	7	8	9	10	11	12	13	14	15			18	19		SALEABLE		34950-2011	34950-2021	34951-1631	34951-1641
KEY A, BLACK, WITH CLIPSLOT	160121-2358	A-BLK-CLIP	GCP	PLR-3	M					5	6	7	8			11	12	13	14	15			18	19		SALEABLE		34950-2011	34950-2021	34951-1631	34951-1641
KEY A, BLACK, WITH CLIPSLOT	160121-2359	A-BLK-CLIP	GCP	PLR-3	M				4	5	6	7	8	9	10			13	14	15			18	19		SALEABLE		34950-2011	34950-2021	34951-1631	34951-1641
KEY A, BLACK, WITH CLIPSLOT	160121-2360	A-BLK-CLIP	GCP	PLR-3	M					5	6	7	8					13	14	15			18	19		SALEABLE		34950-2011	34950-2021	34951-1631	34951-1641
KEY A, BLACK, WITH CLIPSLOT	160121-2361	A-BLK-CLIP	GCP	PLR-3	M				4			7	8	9	10	11	12	13	14				18	19		SALEABLE		34950-2011	34950-2021	34951-1631	34951-1641
KEY A, BLACK, WITH CLIPSLOT	160121-2362	A-BLK-CLIP	GCP	PLR-3	M							7	8			11	12	13	14				18	19		SALEABLE		34950-2011	34950-2021	34951-1631	34951-1641
KEY A, BLACK, WITH CLIPSLOT	160121-2363	A-BLK-CLIP	GCP	PLR-3	M				4			7	8	9	10			13	14				18	19		SALEABLE		34950-2011	34950-2021	34951-1631	34951-1641
KEY A, BLACK, WITH CLIPSLOT	160121-2364	A-BLK-CLIP	GCP	PLR-3	M							7	8					13	14				18	19		SALEABLE		34950-2011	34950-2021	34951-1631	34951-1641
KEY A, BLACK, WITH CLIPSLOT	160121-2365	A-BLK-CLIP	GCP	PLR-3	M				4	5	6	7	8	9	10	11	12						18	19		SALEABLE		34950-2011	34950-2021	34951-1631	34951-1641
KEY A, BLACK, WITH CLIPSLOT	160121-2366	A-BLK-CLIP	GCP	PLR-3	M					5	6	7	8			11	12						18	19		SALEABLE		34950-2011	34950-2021	34951-1631	34951-1641
KEY A, BLACK, WITH CLIPSLOT	160121-2367	A-BLK-CLIP	GCP	PLR-3	M				4	5	6	7	8	9	10								18	19		SALEABLE		34950-2011	34950-2021	34951-1631	34951-1641
KEY A, BLACK, WITH CLIPSLOT	160121-2368	A-BLK-CLIP	GCP	PLR-3	M					5	6	7	8										18	19		SALEABLE		34950-2011	34950-2021	34951-1631	34951-1641
KEY B, LIGHT GRAY, WITH CLIPSLOT	160121-2369	B-LG-CLIP	GCP	PLR-3	M			3								11			14			17		19		SALEABLE		34950-2011	34950-2021	34951-1631	34951-1641
KEY A, BLACK, WITH CLIPSLOT	160121-2370	A-BLK-CLIP	GCP	PLR-3	M								8			11									20	SALEABLE		34950-2011	34950-2021	34951-1631	34951-1641
KEY A, BLACK, WITH CLIPSLOT	160121-2371	A-BLK-CLIP	GCP	PLR-3	M						6	7	8	9		11									20	SALEABLE		34950-2011	34950-2021	34951-1631	34951-1641
KEY A, BLACK, WITH CLIPSLOT	160121-2372	A-BLK-CLIP	GCP	PLR-3	M			3	4		6	7		9	10			13	14		16	17	18	19	20	SALEABLE		34950-2011	34950-2021	34951-1631	34951-1641
KEY B, LIGHT GRAY, WITH CLIPSLOT	160121-2373	B-LG-CLIP	GCP	PLR-3	M					5	6					11	12	13	14	15		17	18		20	SALEABLE		34950-2011	34950-2021	34951-1631	34951-1641
KEY B, LIGHT GRAY, WITH CLIPSLOT	160121-2374	B-LG-CLIP	GCP	PLR-3	M																				20	SALEABLE		34950-2011	34950-2021	34951-1631	34951-1641
KEY B, LIGHT GRAY, WITH CLIPSLOT	160121-2375	B-LG-CLIP	GCP	PLR-3	M														14	15		17	18		20	SALEABLE		34950-2011	34950-2021	34951-1631	34951-1641
KEY B, LIGHT GRAY, WITH CLIPSLOT	160121-2376	B-LG-CLIP	GCP	PLR-3	M																	17	18		20	SALEABLE		34950-2011	34950-2021	34951-1631	34951-1641
KEY A, BLACK, WITH CLIPSLOT	160121-2377	A-BLK-CLIP	GCP	PLR-3	M	1		3			6	7	8		10	11						17	18	19	20	SALEABLE		34950-2011	34950-2021	34951-1631	34951-1641
KEY A, BLACK, WITH CLIPSLOT	160121-2378	A-BLK-CLIP	GCP	PLR-3	M	1		3					8		10	11						17	18	19	20	SALEABLE		34950-2011	34950-2021	34951-1631	34951-1641
KEY A, BLACK, WITH CLIPSLOT	160121-2379	A-BLK-CLIP	GCP	PLR-3	M	1		3	4	5	6	7	8		10	11	12	13				17	18	19	20	SALEABLE		34950-2011	34950-2021	34951-1631	34951-1641
KEY A, BLACK, WITH CLIPSLOT	160121-2380	A-BLK-CLIP	GCP	PLR-3	M	1		3	4	5			8		10	11	12	13				17	18	19	20	SALEABLE		34950-2011	34950-2021	34951-1631	34951-1641
KEY A, BLACK, WITH CLIPSLOT	160121-2381	A-BLK-CLIP	GCP	PLR-3	M	1		3	4	5	6	7			10	11	12	13				17	18	19	20	SALEABLE		34950-2011	34950-2021	34951-1631	34951-1641
KEY A, BLACK, WITH CLIPSLOT	160121-2382	A-BLK-CLIP	GCP	PLR-3	M	1		3	4	5					10	11	12	13				17	18	19	20	SALEABLE		34950-2011	34950-2021	34951-1631	34951-1641
KEY A, BLACK, WITH CLIPSLOT	160121-2383	A-BLK-CLIP	GCP	PLR-3	M	1	2	3						9												SALEABLE		34950-2011	34950-2021	34951-1631	34951-1641
KEY A, BLACK, WITH CLIPSLOT	160121-2384	A-BLK-CLIP	GCP	PLR-3	M			3						9												SALEABLE		34950-2011	34950-2021	34951-1631	34951-1641
KEY A, BLACK, WITH CLIPSLOT	160121-2385	A-BLK-CLIP	GCP	PLR-3	M	1		3	4	5	6	7	8		10	11	12					17	18	19	20	SALEABLE		34950-2011	34950-2021	34951-1631	34951-1641
KEY A, BLACK, WITH CLIPSLOT	160121-2386	A-BLK-CLIP	GCP	PLR-3	M	1		3	4	5			8		10	11	12					17	18	19	20	SALEABLE		34950-2011	34950-2021	34951-1631	34951-1641
KEY A, BLACK, WITH CLIPSLOT	160121-2387	A-BLK-CLIP	GCP	PLR-3	M	1		3	4	5	6	7				11	12					17	18			SALEABLE		34950-2011	34950-2021	34951-1631	34951-1641
KEY A, BLACK, WITH CLIPSLOT	160121-2388	A-BLK-CLIP	GCP	PLR-3	M	1		3	4	5						11	12					17	18			SALEABLE		34950-2011	34950-2021	34951-1631	34951-1641
KEY A, BLACK, WITH CLIPSLOT	160121-2389	A-BLK-CLIP	GCP	PLR-3	M	1	2	3	4	5	6		8		10				14	15	16					SALEABLE		34950-2011	34950-2021	34951-1631	34951-1641
KEY A, BLACK, WITH CLIPSLOT	160121-2390	A-BLK-CLIP	GCP	PLR-3	M	1	2	3	4	5	6		8		10						16					SALEABLE		34950-2011	34950-2021	34951-1631	34951-1641
KEY A, BLACK, WITH CLIPSLOT	160121-2391	A-BLK-CLIP	GCP	PLR-3	M				4	5	6	7	8	9	10											SALEABLE		34950-2011	34950-2021	34951-1631	34951-1641
KEY A, BLACK, WITH CLIPSLOT	160121-2392	A-BLK-CLIP	GCP	PLR-3	M	1	2	3			6	7			10	11	12		14		16			19		SALEABLE		34950-2011	34950-2021	34951-1631	34951-1641
KEY A, BLACK, WITH CLIPSLOT	160121-2393	A-BLK-CLIP	GCP	PLR-3	M		2	3			6				10		12		14							SALEABLE		34950-2011	34950-2021	34951-1631	34951-1641
KEY A, BLACK, WITH CLIPSLOT	160121-2394	A-BLK-CLIP	GCP	PLR-3	M	1	2	3			6	7			10	11	12				16			19		SALEABLE		34950-2011	34950-2021	34951-1631	34951-1641
KEY A, BLACK, WITH CLIPSLOT	160121-2395	A-BLK-CLIP	GCP	PLR-3	M		2	3			6				10		12									SALEABLE		34950-2011	34950-2021	34951-1631	34951-1641
KEY A, BLACK, WITH CLIPSLOT	160121-2396	A-BLK-CLIP	GCP	PLR-3	M	1					6	7	8		10	11						17	18	19	20	SALEABLE		34950-2011	34950-2021	34951-1631	34951-1641
KEY A, BLACK, WITH CLIPSLOT	160121-2397	A-BLK-CLIP	GCP	PLR-3	M	1							8		10	11						17	18	19	20	SALEABLE		34950-2011	34950-2021	34951-1631	34951-1641
KEY A, BLACK, WITH CLIPSLOT	160121-2398	A-BLK-CLIP	GCP	PLR-3	M	1			4	5	6	7	8		10	11	12					17	18	19	20	SALEABLE		34950-2011	34950-2021	34951-1631	34951-1641
KEY A, BLACK, WITH CLIPSLOT	160121-2399	A-BLK-CLIP	GCP	PLR-3	M	1			4	5			8		10	11	12					17	18	19	20	SALEABLE		34950-2011	34950-2021	34951-1631	34951-1641
KEY A, BLACK, WITH CLIPSLOT	160121-2400	A-BLK-CLIP	GCP	PLR-3	M	1			4	5						11	12					17	18			SALEABLE		34950-2011	34950-2021	34951-1631	34951-1641
KEY A, BLACK, WITH CLIPSLOT	160121-2401	A-BLK-CLIP	GCP	PLR-3	M	1			4	5	6	7				11	12					17	18			SALEABLE		34950-2011	34950-2021	34951-1631	34951-1641
KEY A, BLACK, WITH CLIPSLOT	160121-2402	A-BLK-CLIP	GCP	PLR-3	M	1					6	7	8	9		11									20	SALEABLE		34950-2011	34950-2021	34951-1631	34951-1641
KEY A, BLACK, WITH CLIPSLOT	160121-2403	A-BLK-CLIP	GCP	PLR-3	M	1							8			11									20	SALEABLE		34950-2011	34950-2021	34951-1631	34951-1641
KEY A, BLACK, WITH CLIPSLOT	160121-2404	A-BLK-CLIP	GCP	PLR-3	M					5	6					11	12	13					18	19	20	SALEABLE		34950-2011	34950-2021	34951-1631	34951-1641
KEY A, BLACK, WITH CLIPSLOT	160121-2405	A-BLK-CLIP	GCP	PLR-3	M				4	5	6				10	11	12	13			16	17	18	19	20	SALEABLE		34950-2011	34950-2021	34951-1631	34951-1641
KEY A, BLACK, WITH CLIPSLOT	160121-2406	A-BLK-CLIP	GCP	PLR-3	M					5	6	7				11		13					18	19	20	SALEABLE		34950-2011	34950-2021	34951-1631	34951-1641
KEY A, BLACK, WITH CLIPSLOT	160121-2407	A-BLK-CLIP	GCP	PLR-3	M				4	5	6	7			10	11		13			16	17	18	19	20	SALEABLE		34950-2011	34950-2021	34951-1631	34951-1641
KEY A, BLACK, WITH CLIPSLOT	160121-2408	A-BLK-CLIP	GCP	PLR-3	M				4	5	6	7	8		10		12	13			16	17	18	19		SALEABLE		34950-2011	34950-2021	34951-1631	34951-1641
KEY A, BLACK, WITH CLIPSLOT	160121-2409	A-BLK-CLIP	GCP	PLR-3	M					5	6	7	8				12	13					18	19		SALEABLE		34950-2011	34950-2021	34951-1631	34951-1641
KEY A, BLACK, WITH CLIPSLOT	160121-2410	A-BLK-CLIP	GCP	PLR-3	M	1	2	3	4			7	8	9			12	13					18	19		SALEABLE		34950-2011	34950-2021	34951-1631	34951-1641
KEY A, BLACK, WITH CLIPSLOT	160121-2411	A-BLK-CLIP	GCP	PLR-3	M			3	4			7						13					18			SALEABLE		34950-2011	34950-2021	34951-1631	34951-1641
KEY A, BLACK, WITH CLIPSLOT	160121-2412	A-BLK-CLIP	GCP	PLR-3	M				4			7											18			SALEABLE		34950-2011	34950-2021	34951-1631	34951-1641
KEY A, BLACK, WITH CLIPSLOT	160121-2413	A-BLK-CLIP	GCP	PLR-3	M						6													19		SALEABLE		34950-2011	34950-2021	34951-1631	34951-1641
KEY A, BLACK, WITH CLIPSLOT	160121-2414	A-BLK-CLIP	GCP	PLR-3	M								8					13	14	15	16	17	18	19	20	SALEABLE		34950-2011	34950-2021	34951-1631	34951-1641
KEY B, LIGHT GRAY, WITH CLIPSLOT	160121-2415	B-LG-CLIP	GCP	PLR-3	M	1	2	3	4			7	8	9			12	13					18	19		SALEABLE		34950-2011	34950-2021	34951-1631	34951-1641
KEY B, LIGHT GRAY, WITH CLIPSLOT	160121-2416	B-LG-CLIP	GCP	PLR-3	M			3	4			7						13					18			SALEABLE		34950-2011	34950-2021	34951-1631	34951-1641
KEY B, LIGHT GRAY, WITH CLIPSLOT	160121-2417	B-LG-CLIP	GCP	PLR-3	M				4			7											18			SALEABLE		34950-2011	34950-2021	34951-1631	34951-1641
KEY A, BLACK, WITH CLIPSLOT	160121-2418	A-BLK-CLIP	GCP	PLR-3	M									9			12			15			18			SALEABLE		34950-2011	34950-2021	34951-1631	34951-1641
KEY A, BLACK, WITH CLIPSLOT	160121-2419	A-BLK-CLIP	GCP	PLR-3	M										10	11									20	SALEABLE		34950-2011	34950-2021	34951-1631	34951-1641
KEY A, BLACK, WITH CLIPSLOT	160121-2420	A-BLK-CLIP	GCP	PLR-3	M	1		3	4	5	6	7	8		10	11	12								20	SALEABLE		34950-2011	34950-2021	34951-1631	34951-1641
KEY A, BLACK, WITH CLIPSLOT	160121-2421	A-BLK-CLIP	GCP	PLR-3	M										10	11	12								20	SALEABLE		34950-2011	34950-2021	34951-1631	34951-1641
KEY A, BLACK, WITH CLIPSLOT	160121-2422	A-BLK-CLIP	GCP	PLR-3	M			3		5	6					11	12	13								SALEABLE		34950-2011	34950-2021	34951-1631	34951-1641
KEY A, BLACK, WITH CLIPSLOT	160121-2423	A-BLK-CLIP	GCP	PLR-3	M					5			8						14			17				SALEABLE		34950-2011	34950-2021	34951-1631	34951-1641
KEY A, BLACK, WITH CLIPSLOT	160121-2424	A-BLK-CLIP	GCP	PLR-3	M	1	2	3		5	6	7	8			11	12	13								SALEABLE		34950-2011	34950-2021	34951-1631	34951-1641
KEY A, BLACK, WITH CLIPSLOT	160121-2425	A-BLK-CLIP	GCP	PLR-3	M										10	11	12									SALEABLE		34950-2011	34950-2021	34951-1631	34951-1641
KEY B, LIGHT GRAY, WITH CLIPSLOT	160121-2426	B-LG-CLIP	GCP	PLR-3	M	1	2	3	4	5	6	7	8	9			12	13					18	19	20	SALEABLE		34950-2011	34950-2021	34951-1631	34951-1641
KEY B, LIGHT GRAY, WITH CLIPSLOT	160121-2427	B-LG-CLIP	GCP	PLR-3	M			3	4	5	6	7						13					18		20	SALEABLE		34950-2011	34950-2021	34951-1631	34951-1641
KEY B, LIGHT GRAY, WITH CLIPSLOT	160121-2428	B-LG-CLIP	GCP	PLR-3	M				4	5	6	7											18		20	SALEABLE		34950-2011	34950-2021	34951-1631	34951-1641
KEY A, BLACK, WITH CLIPSLOT	160121-2429	A-BLK-CLIP	GCP	PLR-3	M			3	4			7			10						16	17				SALEABLE		34950-2011	34950-2021	34951-1631	34951-1641

Mouser Electronics

Authorized Distributor

Click to View Pricing, Inventory, Delivery & Lifecycle Information:

Molex:
160121-2101