BILL OF MATERIALS (BOM)

DESCRIPTION	PART NUMBER	COLOR	MATERIAL	STATUS
MINI50 SEALED, LIGHT GRAY	34967-0002	LIGHT GRAY	PA66 NYLON G.F. 35%	SALEABLE
MINI50 SEALED, STONE GRAY	34967-0003	STONE GRAY	SPS/PA66 G.F. 30%	PRE-PRODUCTION

NOTES: VALID UNLESS OTHERWISE SPECIFIED

1. GENERAL:

a. APPLICATION SPECIFICATION SEE: AS-34894-0001
b. PRODUCT SPECIFICATION SEE: 349670001 PS
c. PACKAGING SPECIFICATION PER MOLEX DRAWING: 349670002-PK
d. PARTS MUST BE IN COMPLIANCE TO MOLEX CHEMICAL SUBSTANCES FOR PRODUCTS AND PACKAGING SPECIFICATION: 2014040014
e. DATA MUST BE SUBMITTED UNDER THE MOLEX PART NUMBER TO IMDS (COMPANY ID#13255)
f. FLAMMABILITY REQUIREMENT: PER ISO3795 OR GM3191
   1. BURN RATE 100mm/MIN MAXIMUM
   2. MATERIAL MUST BE SELF EXTINGUISHING

2. DESIGN - MATERIALS: SEE BOM TABLE.

3. DESIGN - GEOMETRY:

a. THE 3-D CAD DATA IS BASIC (WITHOUT TOLERANCE) AND THE MASTER FOR THIS PART WITH THE EXCEPTION OF UNDERLINED DIMENSIONS. DIMENSIONAL INFORMATION NOT SHOWN IN THIS DRAWING IS DEFINED BY THE DATA FILE AT ITS LATEST REVISION.
b. GEOMETRIC DIMENSIONS AND TOLERANCES PER ASME Y14.5 - 2009
c. EDGES AND UNDIMENSIONED DETAILS PER ISO13715
d. CORNERS SHOWN AS SHARP TO BE R 0.2 MAX.
e. CAVITY ID SHALL BE 0.15 MAX RECESS.

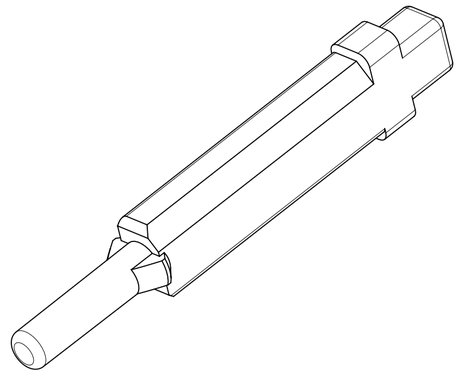

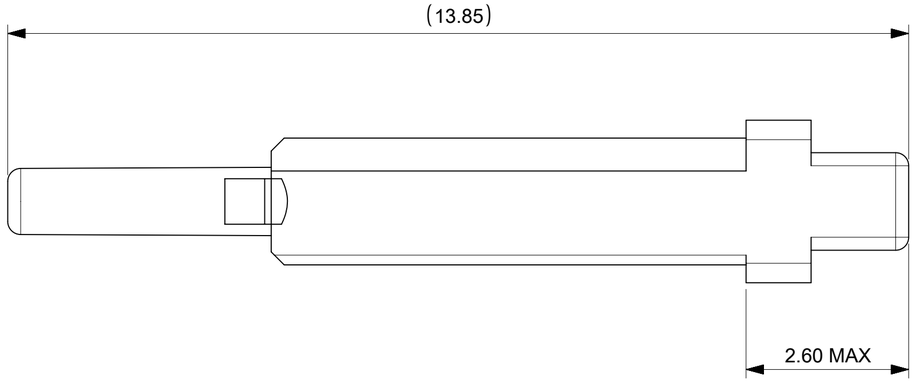

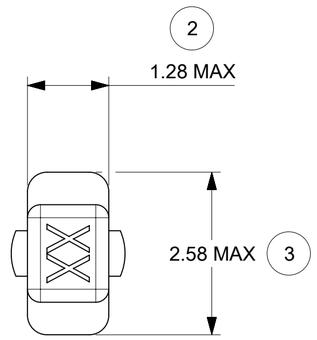

SYMBOLS	
FA	= 0
FC	= 0
FB	= 0
S	= 0
▼	= 0
C	= 0
☒	= 0
■	= 0
V	= 0

THIS DRAWING CONTAINS INFORMATION THAT IS PROPRIETARY TO MOLEX ELECTRONIC TECHNOLOGIES, LLC AND SHOULD NOT BE USED WITHOUT WRITTEN PERMISSION

DIMENSION UNITS	SCALE
mm	10:1

GENERAL TOLERANCES (UNLESS SPECIFIED)

ANGULAR TOL	± °
4 PLACES	±
3 PLACES	±
2 PLACES	±
1 PLACE	±
0 PLACES	±

DRAFT WHERE APPLICABLE MUST REMAIN WITHIN DIMENSIONS

CURRENT REV DESC: PRODUCTION RELEASE

EC NO: 637544
DRWN: MLI149 2020/05/13
CHK'D: JCONDON 2020/05/28
APPR: JCONDON 2020/05/28

INITIAL REVISION:
DRWN: MLI149 2019/05/23
APPR: JCONDON 2019/06/14

THIRD ANGLE PROJECTION | DRAWING: A2-SIZE | SERIES: 34967

molex

CTX50 LOOSE PIECE CAVITY PLUG

PRODUCT CUSTOMER DRAWING

DOCUMENT NUMBER	DOC TYPE	DOC PART	REVISION
349670002	PSD	000	A1

MATERIAL NUMBER	CUSTOMER	SHEET NUMBER
SEE BOM		1 OF 1

DOCUMENT STATUS	P1	RELEASE DATE	2020/05/28 00:39:02

FORMAT: tb-prod-A2
REVISION: H
DATE: 2018/01/18

Mouser Electronics

Authorized Distributor

Click to View Pricing, Inventory, Delivery & Lifecycle Information:

Molex:
34967-0003