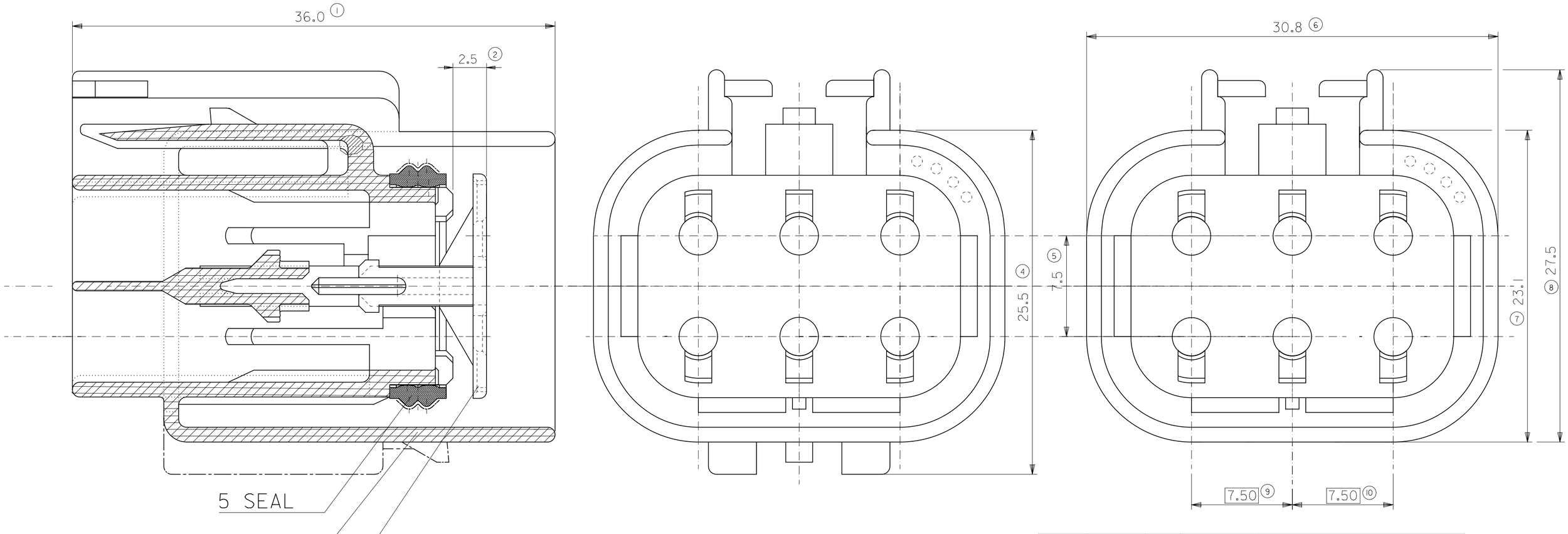

5 SEAL

1 HOUSING

2 SPACER

1 ST STOP POSITION
(COLOR BLUE)

COLOR	FARBE	RAL	MOLEX-NO.
BLACK	SCHWARZ	9005	98029-0011
BROWN	BRAUN	8017	98029-0012
BLUE	BLAU	5015	98029-0013
GREEN	GRUEN	6001	98029-0014
YELLOW	GELB	1018	98029-0015
GREY	GRAU	7035	98029-0016
ORANGE	ORANGE	1007	98029-0017

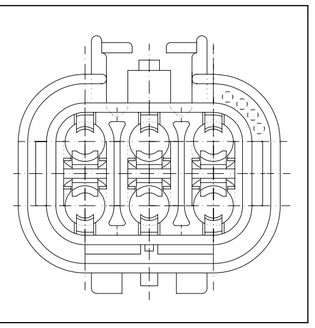

VERSION WITH MOUNTING - CLIP

COLOR	FARBE	RAL	MOLEX-NO.
BLACK	SCHWARZ	9005	98029-0001
BROWN	BRAUN	8017	98029-0002
BLUE	BLAU	5015	98029-0003
GREEN	GRUEN	6001	98029-0004
YELLOW	GELB	1018	98029-0005
GREY	GRAU	7035	98029-0006
ORANGE	ORANGE	1007	98029-0007
NATUR	NATURAL	-	98029-0008

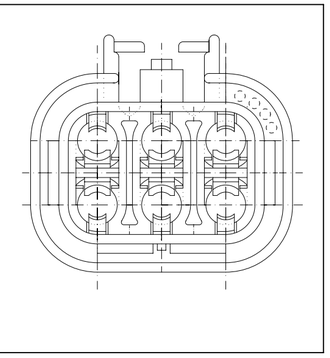

VERSION WITHOUT MOUNTING - CLIP

MOLEX - CODE

XXXXX - X X X X

- 1-8 COLOR
- 0=WITHOUT CLIP
  1=WITH CLIP
- 0=HOUSING WITH SPACER
  1=HOUSING WITHOUT SPACER
- BASIC PART - NO.

MATERIAL: 1 PBTP 30% GV
2 PBTP 30% GV
5 SILICON RUBBER

THIS DRAWING CONTAINS INFORMATION THAT IS PROPRIETARY TO MOLEX ELECTRONIC TECHNOLOGIES, LLC AND SHOULD NOT BE USED WITHOUT WRITTEN PERMISSION

DIMENSION UNITS	SCALE
mm	5:1

GENERAL TOLERANCES (UNLESS SPECIFIED)

	MM	INCH
4 PLACES	±	±
3 PLACES	±	±
2 PLACES	±	±
1 PLACE	± 0.2	±
0 PLACES	±	±
ANGULAR TOL	± °	

DRAFT WHERE APPLICABLE MUST REMAIN WITHIN DIMENSIONS

CURRENT REV DESC: OBSOLETED PART NUMBERS AS PER PCN#506884

EC NO: 662763
DRWN: SKANDB 2021/01/19
CHK'D: GGA 2021/06/01
APPR: GGA 2021/06/01

INITIAL REVISION:
DRWN: NME
APPR: JHO

THIRD ANGLE PROJECTION | DRAWING: C-SIZE | SERIES: 98029

molex

6-WAY HOUSING FOR
FEMALE TERMINAL 2.8-SYSTEM WATERPROOF

PRODUCT CUSTOMER DRAWING

DOCUMENT NUMBER	DOC TYPE	DOC PART	REVISION
SDA-98029	PSD	001	R

MATERIAL NUMBER	CUSTOMER	SHEET NUMBER
SEE TABLE	GENERAL MARKET	1 OF 1

DOCUMENT STATUS	P1	RELEASE DATE	2021/06/01 13:36:54

FORMAT: Eng-tega-master-tb-prod-C
REVISION: E
DATE: 2020/01/14

Mouser Electronics

Authorized Distributor

Click to View Pricing, Inventory, Delivery & Lifecycle Information:

Molex:

98029-0001 98029-0011