**Part Number:** 0355330226
**Status:** Active
**Overview:** Automotive Bulb Sockets
**Description:** PT Bulb Socket Single Housing Assembly, Type C, P21W, Unsealed, White

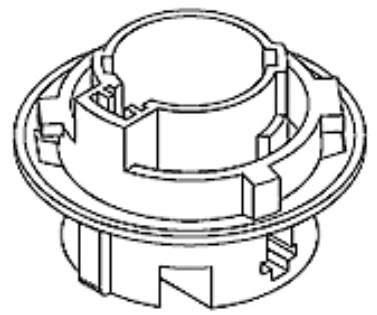

*Series image - Reference only*

**Documents:**

3D Model
3D Model (PDF)
Drawing (PDF)
Product Specification PS-35532-001-001 (PDF)
Packaging Specification PK-35533-001-001 (PDF)
RoHS Certificate of Compliance (PDF)

**General**

| | |
|---|---|
| Product Family | Other Sockets |
| Series | 35533 |
| Comments | C-Type, C-Type |
| Component Type | Socket |
| Overview | Automotive Bulb Sockets |
| Product Name | PT Bulb Socket |
| UPC | 756054249666 |

**Physical**

| | |
|---|---|
| Circuits (Loaded) | 2 |
| Circuits (maximum) | 2 |
| Color - Resin | White |
| Durability (mating cycles max) | 50 |
| Entry Angle | Vertical |
| Keying to Mating Part | None |
| Material - Metal | Phosphor Bronze |
| Material - Resin | Nylon |
| Net Weight | 5.342/g |
| PCB Locator | No |
| PCB Retention | N/A |
| Packaging Type | Bag |
| Pitch - Mating Interface | N/A |
| Temperature Range - Operating | -40° to +85°C |
| Termination Interface: Style | Through Hole |

**Electrical**

| | |
|---|---|
| Current - Maximum per Contact | 7.0A |
| Voltage - Maximum | 12V |

**Material Info**

**Reference - Drawing Numbers**

| | |
|---|---|
| Packaging Specification | PK-35533-001-001 |
| Product Specification | PS-35532-001-001 |
| Sales Drawing | SD-35533-003 |

**EU ELV**
**Compliant**

**EU RoHS**
**Compliant**

**China RoHS**

**REACH SVHC**
Not Contained Per - ED/71/2019 (16 July 2019)

**Halogen-Free Status**
**Low-Halogen**

For more information, please visit Contact US

| | |
|---|---|
| China ROHS | Not Relevant |
| ELV | Compliant |
| RoHS Phthalates | Not Contained |

**Search Parts in this Series**
35533 Series

**Mates With**
Bayonet Base Bulb

**Use With**
Positive Terminal for PT Bulb Socket 35438 <br>Earth Terminal for PT Bulb Socket 35439

# Mouser Electronics

Authorized Distributor

Click to View Pricing, Inventory, Delivery & Lifecycle Information:

Molex:
35533-0226